SERVICE MANUAL

AMIGA COMPUTER
MODEL 1000
Preliminary
COMPONENT LEVEL REPAIR
PN 314038-02

AMIGA™

AMIGA COMPUTER
MODEL 1000
Preliminary
COMPONENT LEVEL REPAIR
PN 314038-02

Commodore-Amiga, Inc.
1200 Wilson Drive, West Chester, Pennsylvania 19380 U.S.A.

Commodore-Amiga makes no expressed or implied warranties with regard to the information contained herein. The information is made available solely on an as is basis, and the entire risk as to quality and accuracy is with the user. Commodore-Amiga Inc. shall not be liable for any consequential or incidental damages in connection with the use of the information contained herein. The listing of any available replacement part herein does not constitute in any case a recommendation, warranty or guaranty as to quality or suitability of such replacement part. Reproduction or use without expressed permission, of editorial or pictorial content, in any matter is prohibited.

This manual contains copyrighted and proprietary information. No part of this publication may be reproduced, stored in a retrieval system, or transmitted in any form or by any means, electronic, mechanical, photocopying, recording or otherwise, without the prior written permission of Commodore-Amiga Inc.

Copyright © 1986 by Commodore-Amiga Inc.
All rights reserved.

CONTENTS

TITLE	PAGE
OVERVIEW	1
SYSTEM BLOCK DIAGRAM	4
ADDRESS MAP	5
AGNUS	
FEATURES/PIN CONFIGURATIONS	6
BLOCK DIAGRAM	7
DENISE	
FEATURES/PIN CONFIGURATIONS	8
BLOCK DIAGRAM	9
PAULA	
FEATURES/PIN CONFIGURATIONS	10
BLOCK DIAGRAM	11
VIDEO CONNECTORS	12
PARALLEL PORT	14
SERIAL PORT	15
EXTERNAL DISK CONNECTOR	16
MOUSE/JOYSTICK/LIGHTPEN PORTS	17
SCHEMATICS	
MOUSE	18
KEYBOARD	19
POWER SUPPLY	20
RAM EXPANSION	22
PIGGYBACK PCB	25
MAIN LOGIC PCB	30
PARTS LISTS	
RAM EXPANSION	21
PIGGYBACK PCB	23
MAIN LOGIC PCB	26
BOARD LAYOUTS	
RAM EXPANSION	21
PIGGYBACK PCB	24
MAIN LOGIC PCB	29
CBM APPROVED VENDOR LIST	31

OVERVIEW

The AMIGA computer is a high-performance system with advanced graphics and audio features. The Functional Block Diagram on page 4 illustrates the relationship of the various circuits on the Main Logic board and Piggyback. The principle hardware features consist of the 68000 microprocessor which runs at 7.2 MHz, 256K bytes of RAM (user expandable to 512K, configurable to 8M), 2 parallel I/O chips and 3 custom VLSI chips that provide the unique capabilities for animation, graphics and sound.

68000 MICROPROCESSOR

The 68000 is the CPU of the system. All other resources are under software control via control data issued from it. All 3 custom chips have control registers that are written by the 68000.

The 68000 communicates with the rest of the computer via its address bus, data bus and control lines. Notice that in the block diagram the 3 custom chips do not reside directly on the 68000 buses. When the 68000 starts a bus cycle that is intended for the custom chips or the display RAM, the bus control logic detects whether or not the display RAM buses are available. The bus control logic will not assert the acknowledge signal (/DTACK) back to the 68000 until the display RAM buses are available. Once the 68000 receives /DTACK it completes the bus cycle. Connecting the display RAM buses to the 68000 buses is discussed further in the section on bus control and multiplexers. Because the display RAM is capable of approximately twice the bandwidth of the 68000, the 68000 is usually not delayed by waiting for the display buses to become available.

The 68000 can fetch instructions from:

Boot ROM
Processor RAM
Display RAM

The 68000 can read and write data directly to:

Boot ROM (Read Only)
Processor RAM (After boot this is Read Only)
Display RAM
Parallel I/O Chips
3 Custom I.C.s

The 68000 transmits data and control to and from the peripherals via the parallel I/O and the 3 custom chips.
7M is the processor clock to the 68000. C1-C4 and /DAC are used to clock the custom chips and for determining the timing of signals to the memory arrays.

BOOT ROM

The boot ROM is comprised of 2 standard 32K byte ROMS configured in parallel to form a 32K word that includes the routines for bringing in additional code from the floppy disk.

PROCESSOR RAM

This 256K byte RAM is intended to hold kernal and DOS routines. It has associated logic which allows it to be write protected once it has been loaded. This allows it to function as ROM once the boot load has been completed. Except during the boot sequence, "writes" to this RAM are prevented.

This RAM and its associated buffers and logic are resident on the piggyback board (daughter card), which is attached to the main board.

PARALLEL I/O

The 2 multi-purpose 8520 I/O chips provide the following:

I/O to and from the parallel port connector
Control lines to and from the joystick/mouse ports
A control line to the front panel LED
Internal control lines
Keyboard control lines, clock and data
Serial port control lines
Floppy disk interface control lines
Internal timers

These 2 chips reside on the 68000 buses and are read and written by the 68000.

CLOCKS GENERATOR

The entire computer board is run synchronous to the 3.579545 MHz color clock. This is accomplished by generating a number of submultiple frequencies from the master 28.31818 MHz crystal oscillator. In order to reduce high frequency radiation, all clock generation is done in the small metal RF can on the main logic board. The following are the primary clocks:

C1	3.579545 MHz color clock
C2	C1 shifted 45 degrees later
C3	C2 shifted 45 degrees later
C4	C3 shifted 45 degrees later
7M	C1 XORed with C3 = 7.15909 MHz
/DAC	7M shifted 90 degrees later

THE 3 CUSTOM CHIPS

The 3 custom chips provide very fast manipulation of graphics and audio data in the display RAM. All of the major functions in the chips are DMA driven; that is, streams of data are moved between the custom chips and display RAM under DMA control. These streams of data are acted upon by the custom chips. Agnus, custom chip #1, contains 25 dedicated purpose DMA counters.

The 3 chips have control registers which are usually loaded by the 68000. However, Agnus also has the capability of loading control registers in the other 2 custom chips. When Agnus performs a bus cycle, it outputs a code on the Register Address Bus telling the other 2 chips the nature of the bus cycle. This is necessary because many of the bus cycles provide data to or from the other 2 chips, thus they must cooperate appropriately.

In addition to manipulating data in the display RAM, the custom chips output streams of data to the video output circuits, audio output circuits and move data to and from the floppy disks and serial port.

Note that the display RAM buses can be completely isolated from the 68000 buses by the multiplexers and drivers. Thus, Agnus can be performing a bus cycle on the display buses simultaneously with the 68000 performing a bus cycle on its buses. This parallelism increases throughput.

BUS CONTROL, ADDRESS/DATA MUX, ADDRESS DRIVER

The bus control logic resides primarily in 4 PALs on the piggyback board. They provide the logic for connecting the 68000 buses to the display RAM buses when the 68000 is attempting to access the display RAM or the custom chips. To do this, the bus control logic must perform 3 major functions:

Synchronize the 68000 to the current phase of C1
Arbitrate between the 68000 and Agnus for the display buses
Turn on the muxes and bus drivers appropriate to the current cycle

Synchronizing the 68000 to C1 is straightforward, since the 68000 is clocked by 7M which is twice the frequency and synchronous to C1. If the 68000 starts a bus cycle in the wrong phase of C1, the bus control logic merely delays /DTACK long enough so that the 68000 will complete the bus cycle in the desired phase relationship to C1. This phase relationship is necessary because the custom chips and the display RAM are clocked by C1.

Arbitration is very simple. Agnus tells the bus control prior to taking the display RAM buses by asserting an input to the PALs called /DBR. Whenever Agnus has the display buses and the 68000 wants them, the 68000 is held off by not giving it /DTACK. In this state the 68000 has no affect on the display buses until the bus controller enables the bus drivers and multiplexers, after Agnus has given up the display buses.

DISPLAY RAM

The display RAM is an ordinary 256K byte read/write memory that resides on the RAM address and RAM data buses. It is expandable to 512K bytes by the addition of the RAM expansion module. It is implemented using standard dynamic RAMs, refreshed by Agnus.

The display RAM is really used for much more than just holding graphics data. It also stores code and data for the 68000.

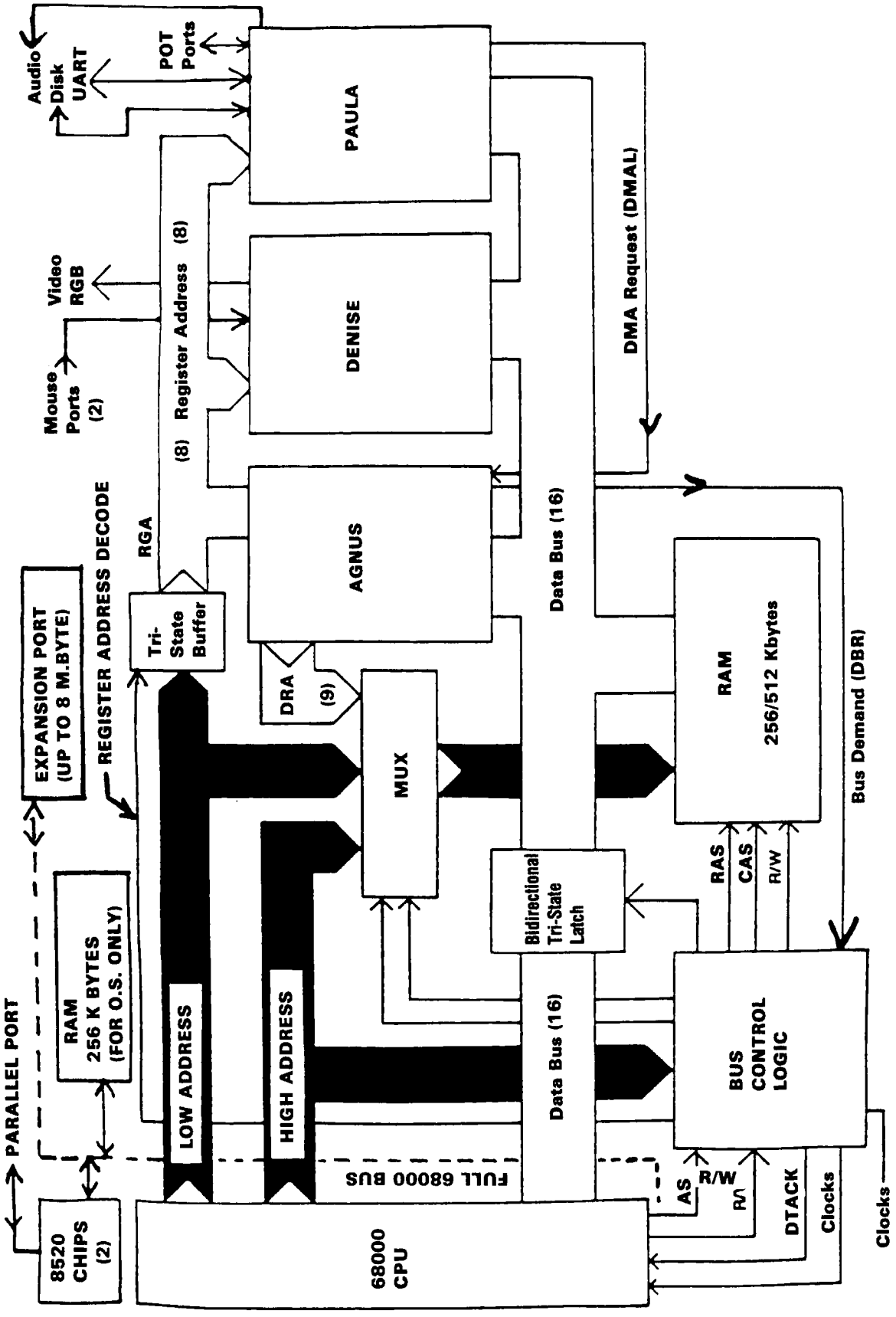

AMIGA SYSTEM BLOCK DIAGRAM

ADDRESS MAP

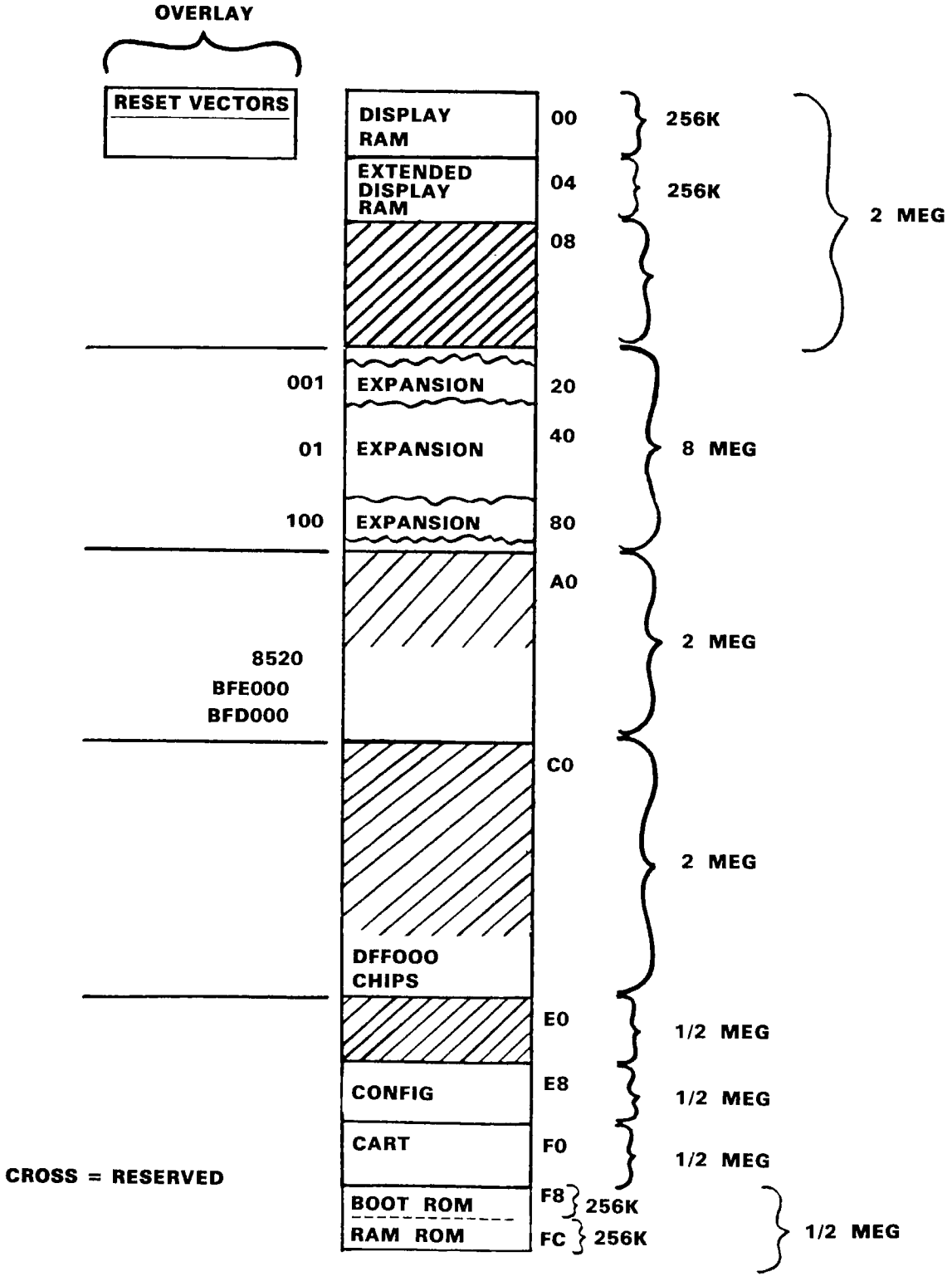
OVERLAY
RESET VECTORS
DISPLAY RAM
00
256K
EXTENDED DISPLAY RAM
04
256K
2 MEG
08
001
EXPANSION
20
01
EXPANSION
40
8 MEG
100
EXPANSION
80
A0
2 MEG
8520
BFE000
BFD000
C0
2 MEG
DFFOOO
CHIPS
E0
1/2 MEG
CONFIG
E8
1/2 MEG
CART
F0
1/2 MEG
CROSS = RESERVED
BOOT ROM
F8
256K
RAM ROM
FC
256K
1/2 MEG

CUSTOM ANIMATION CHIP

— Agnus —

FEATURES:

- Bit Blitter — Uses Hardware to Move Display Data — Allows High Speed Animation — Frees the CPU for other Concurrent Tasks
- Display Synchronized Coprocessor
- Controls 25 DMA Channels — Allows the Disk and Sound to Operate with Minimal CPU intervention

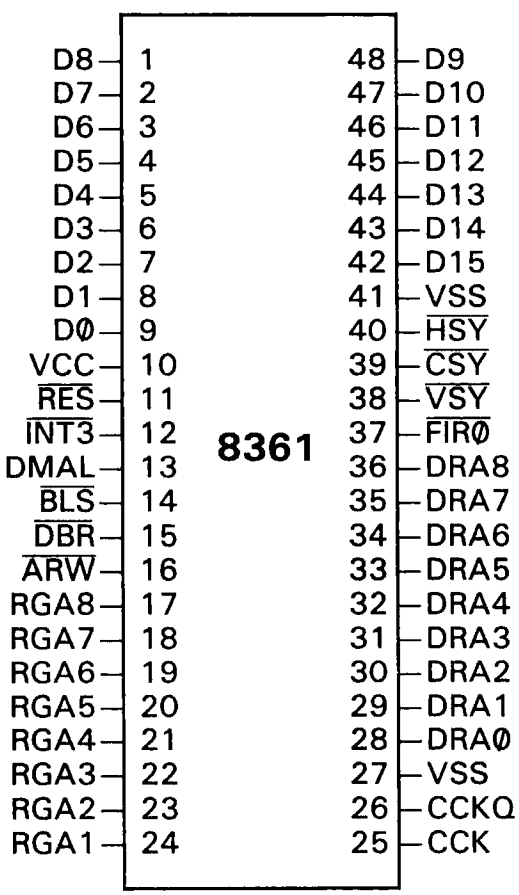

PIN	DESIGNATION	FUNCTION	TYPE
1-9	DO-D8	Data Bus Lines 0-8	I/O
10	Vcc	+5VDC	I
11	/RES	System Reset	I
12	/INT3	Interrupt Level 3	O
13	DMAL	DMA Request Line	I
14	/BLS	Blitter Slowdown	I
15	/DBR	Data Bus Request	O
16	/ARW	Agnus Ram Write	O
17-24	RGA1-8	Register Address 1-8	I/O
25	CCK	Color Clock	I
26	CCKQ	Color Clock Delay	I
27	Vss	Ground	I
28-36	DRA0-8	Dynamic Ram Address 0-8	O
37	/LP	Light Pen Input	I
38	/VSY	Vertical Sync	I/O
39	/CSY	Composite Sync	O
40	/HSY	Horizontal Sync	I/O
41	Vss	Ground	I
42-48	D9-D15	Data Bus Lines 9-15	I/O

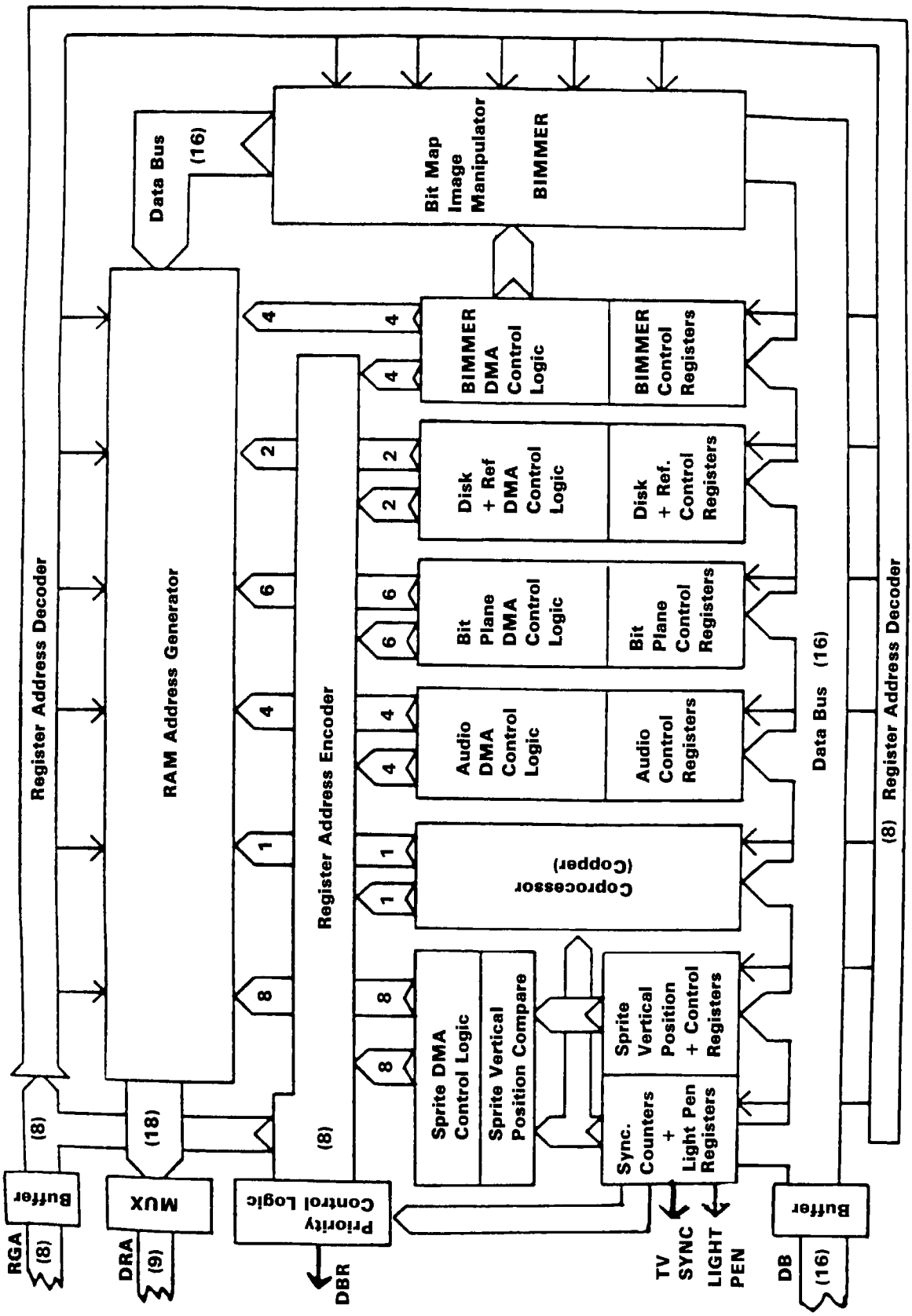

AGNUS BLOCK DIAGRAM

CUSTOM GRAPHICS CHIP

— Denise —

FEATURES:

- Many Different Resolutions 320 X 200 up to 640 X 400
- 4096 Colors on a TV or RGB Monitor
- Eight Re-usable Sprite Controllers
- 60 or 80 Column Text
- Same Software for All TVs and Monitors

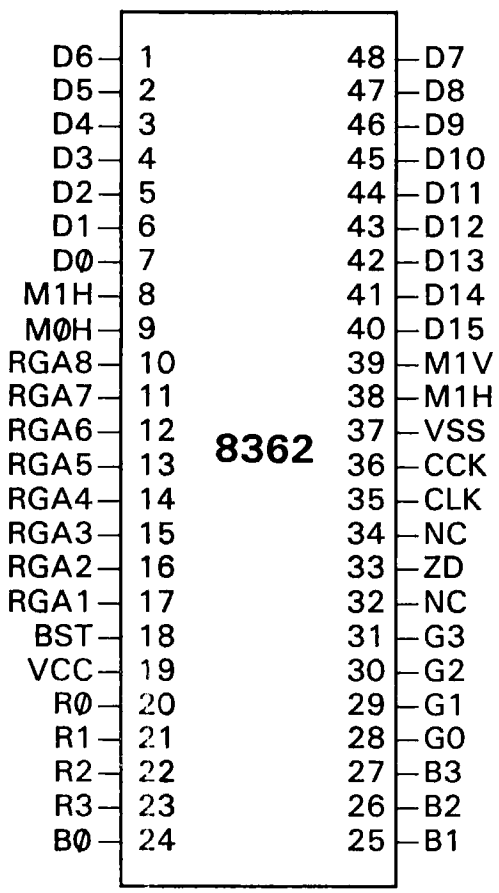

PIN	DESIGNATION	FUNCTION	TYPE
1-7	D0-D6	Data Bus Lines 0-6	I/O
8	M1H	Mouse 1 Horizontal	I
9	M0H	Mouse 0 Horizontal	I
10-17	RGA1-8	Register Address 1-8	I
18	/BURST	Color Burst	O
19	Vcc	+5 VDC	I
20-23	R0-3	Video Red Bit 0-3	O
24-27	B0-3	Video Blue Bit 0-3	O
28-31	G0-3	Video Green Bit 0-3	O
32	N/C	No Connection	N/C
33	/ZD	Background Indicator	O
34	N/C	No Connection	N/C
35	7M	7.15909 MHz Clock	I
36	CCK	Color Clock	I
37	Vss	Ground	I
38	M0V	Mouse 0 Vertical	I
39	M1V	Mouse 1 Vertical	I
40-48	D7-D15	Data Bus Lines 7-15	I/O

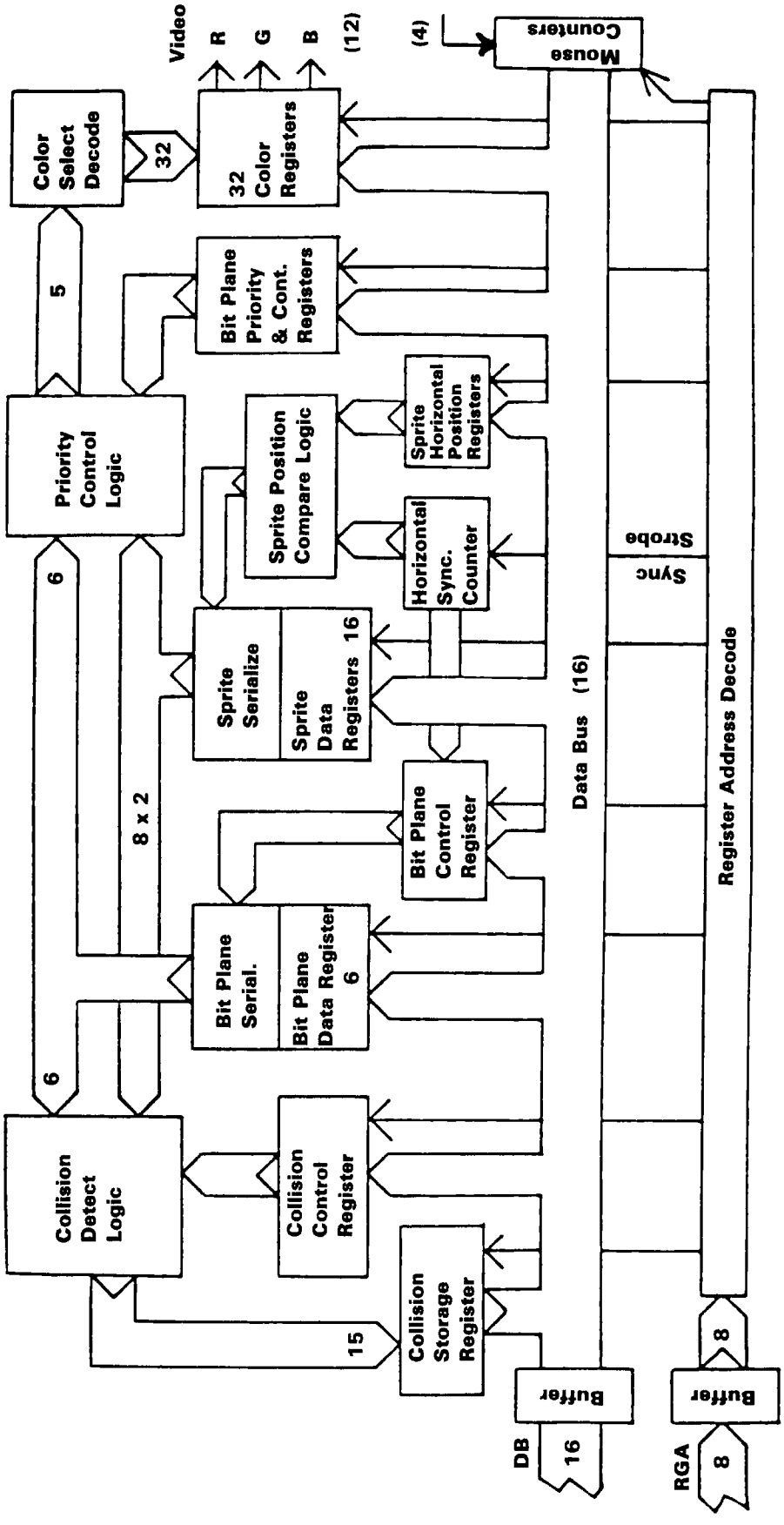

DENISE BLOCK DIAGRAM

CUSTOM SOUND/PERIPHERALS CHIP

— Paula —

FEATURES:

- Four Voices of Sound Output configured as Two Stereo Channels
- Nine Octaves
- Complex Waveforms
- Uses both Amplitude and Frequency Modulation
- I/O Controls for Disk Data and Controller Ports
- Microdisk Controller
- Interrupt Control System

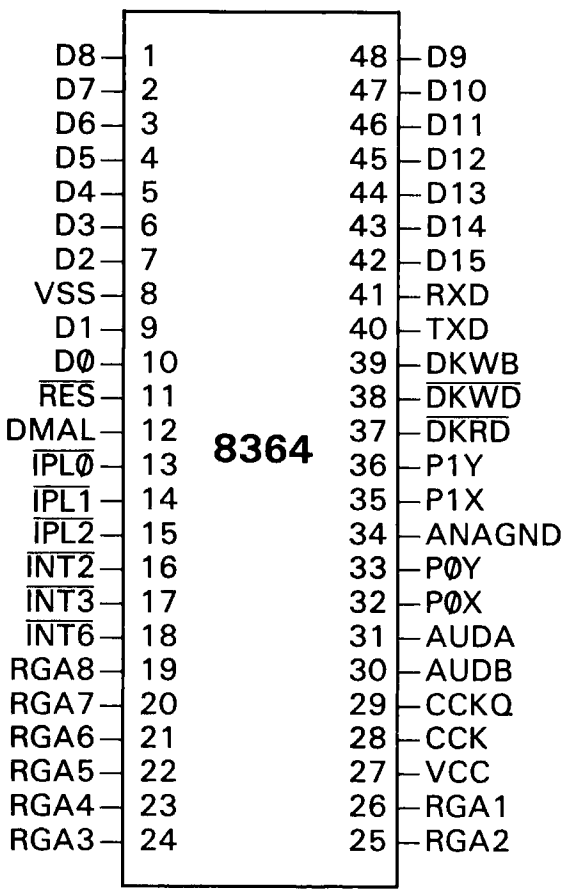

PIN	DESIGNATION	FUNCTION	TYPE
1-7	D2-D8	Data Bus Lines 2-8	I/O
8	Vss	Ground	I
9,10	D0,D1	Data Bus Lines 0,1	I/O
11	/RES	System Reset	I
12	DMAL	DMA Request Line	O
13-15	/IPLO-2	Interrupt Line 0-2	O
16-18	/INT2,3,6	Interrupt Level 2,3,6	I
19-26	RGA1-8	Register Address 1-8	I
27	Vcc	+5 VDC	I
28	CCK	Color Clock	I
29	CCKQ	Color Clock Delay	I
30	AUDB	Right Audio	O
31	AUDA	Left Audio	O
32	POT0X	Pot 0X	I/O
33	POT0Y	Pot 0Y	I/O
34	VSSANA	Analog Ground	I
35	POT1X	Pot 1X	I/O
36	POT1Y	Pot 1Y	I/O
37	/DKRD	Disk Read Data	I
38	/DKWD	Disk Write Data	O
39	DKWE	Disk Write Enable	O
40	TXD	Serial Transmit Data	O
41	RXD	Serial Receive Data	I
42-48	D9-15	Data Bus Lines 9-15	I/O

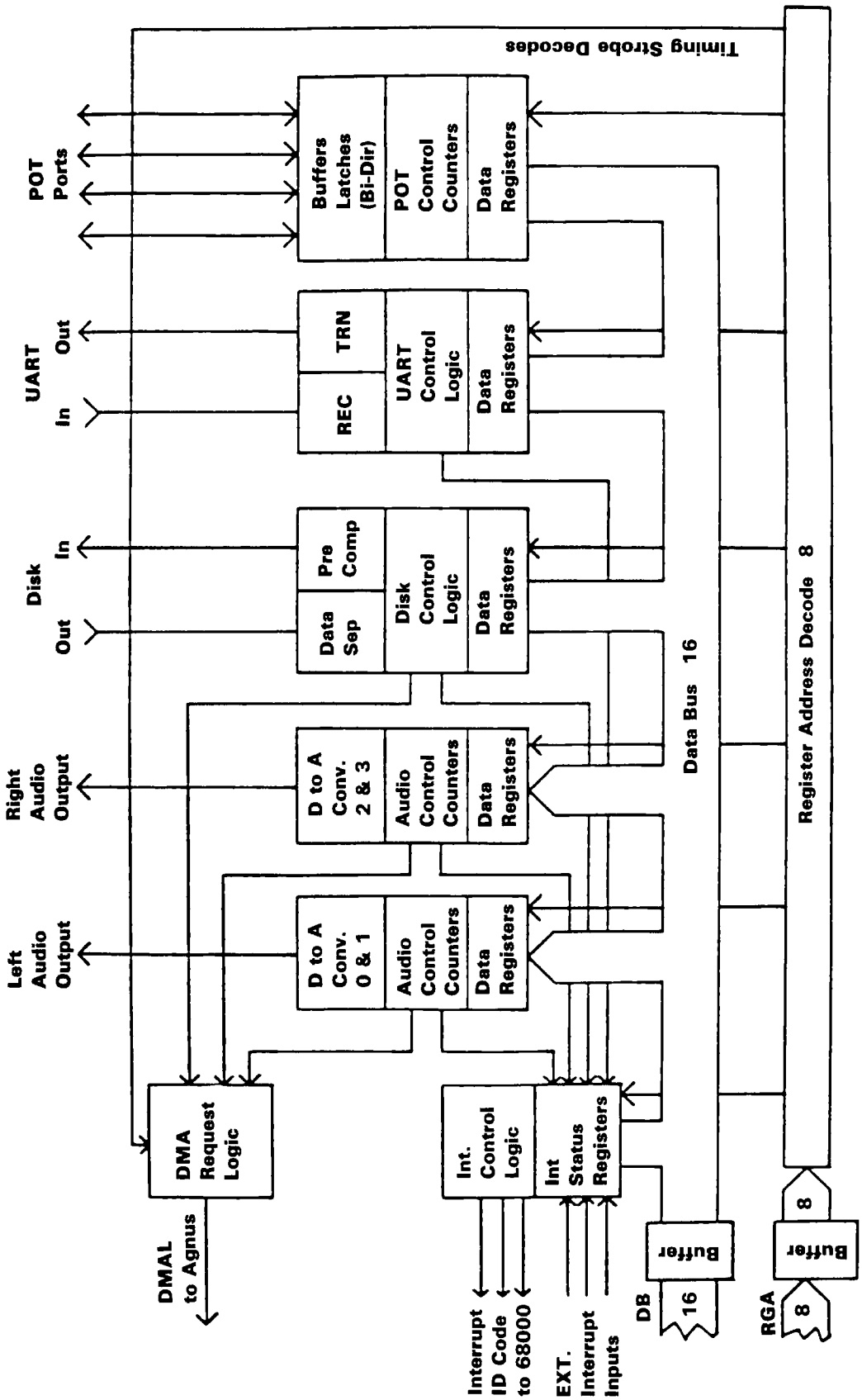

PAULA BLOCK DIAGRAM

VIDEO CONNECTORS
— J3 RGB —

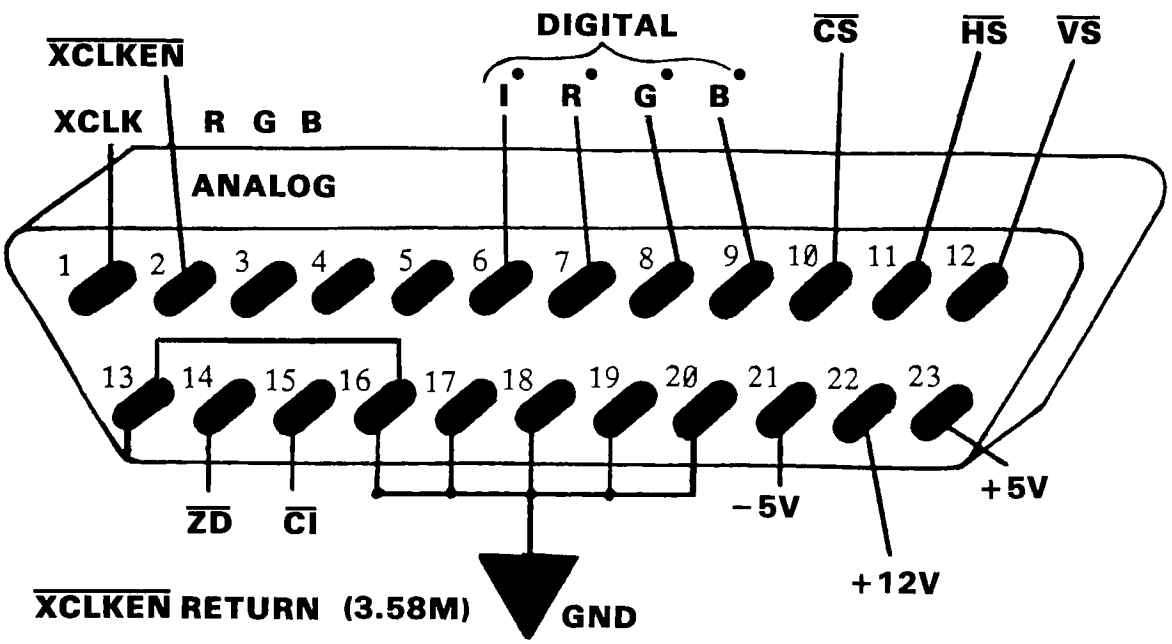

PIN	LINE	FUNCTION
1	/XCLK	External Clock Input
2	/XCLKEN	External Clock Enable
3	R	Analog Red
4	G	Analog Green
5	B	Analog Blue
6	I	Digital Intensity
7	R	Digital Red
8	G	Digital Green
9	B	Digital Blue
10	/CS	Composite Sync — Active Low
11	/HS	Horizontal Sync — Active Low
12	/VS	Vertical Sync — Active Low
13	GNDRTN	Return for XCLKEN
14	/ZD	Zero Detect — Active Low
15	/C1	Color Clock 3.58 MHz
16-20	GND	Ground
21	-5V	-5 VDC Power
22	+12V	+12 VDC Power
23	+5V	+5 VDC Power

J2 COMPOSITE

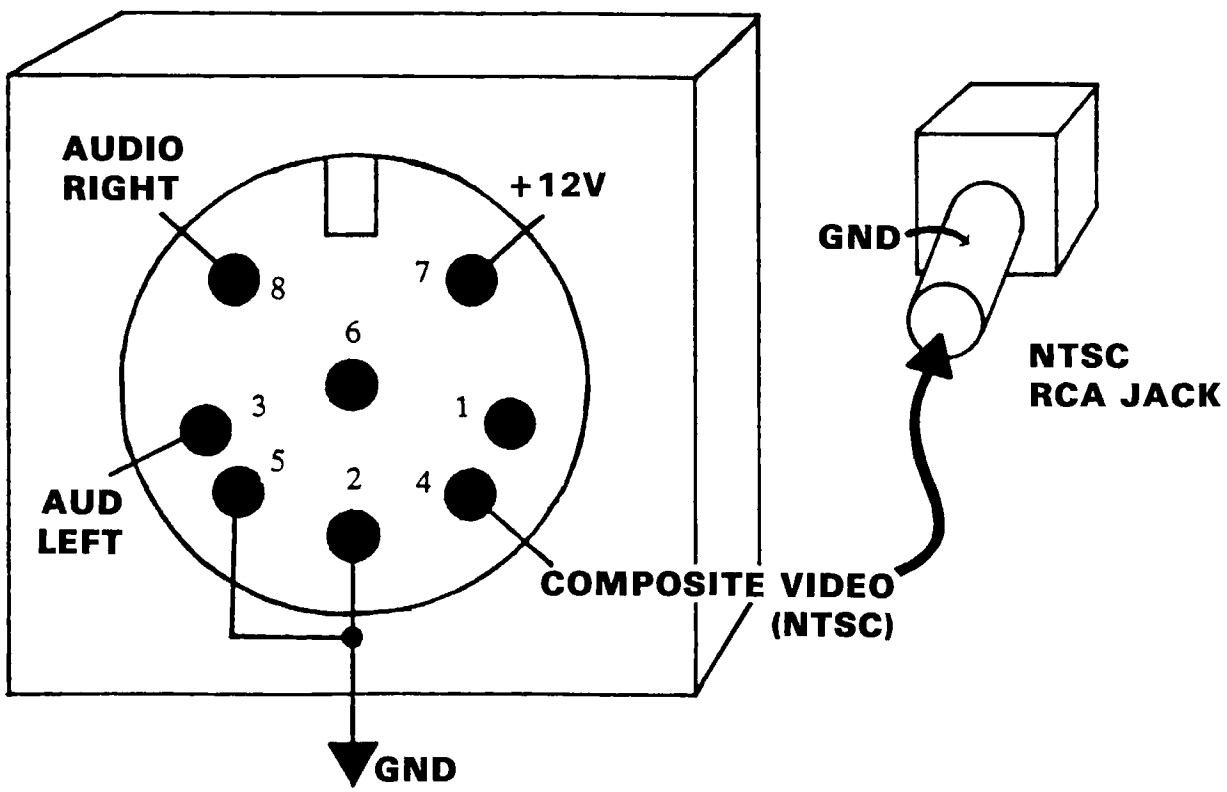

Requires MODULATOR for 8-pin DIN composite video output.

PARALLEL PORT

— J8 —

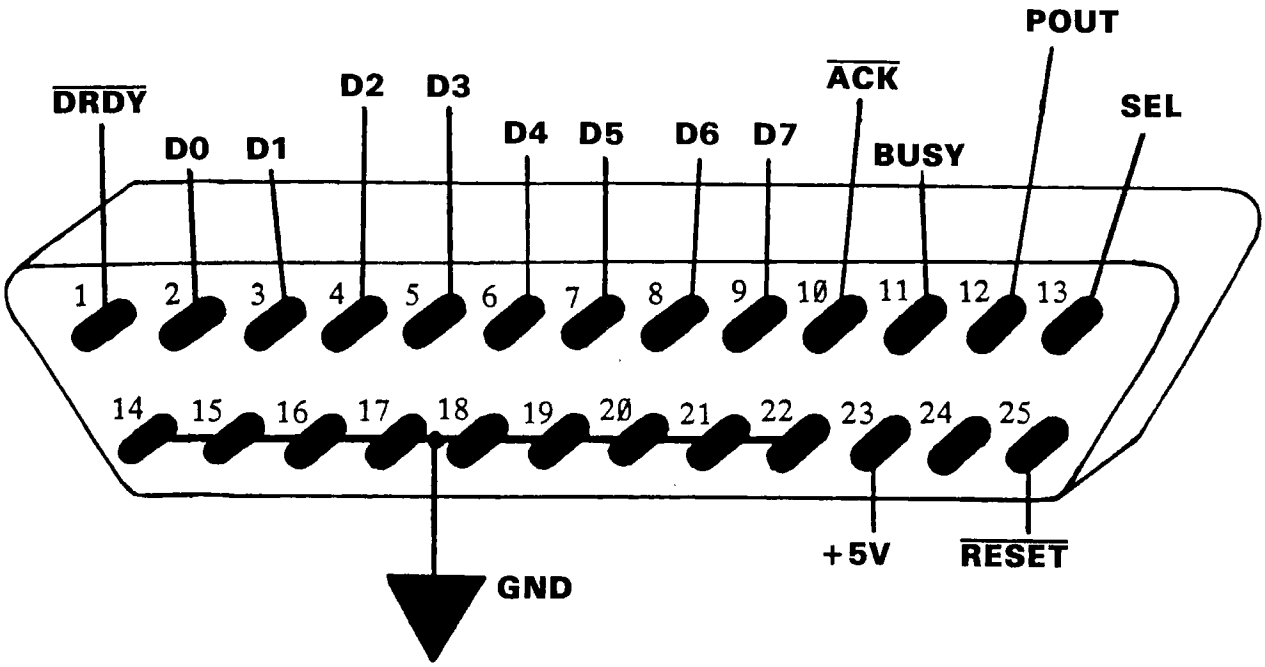

PIN	LINE	FUNCTION
1	/DRDY	Data Ready — Active Low
2-9	D0-D7	Data Lines 0-7
10	/ACK	Acknowledge — Active Low
11	BUSY	Busy
12	POUT	Paper Out
13	SEL	Select
14-22	GND	Signal Ground
23	+5	5 VDC Supply
24	N/C	
25	/RESET	Reset — Active Low

SERIAL PORT

— J6 —

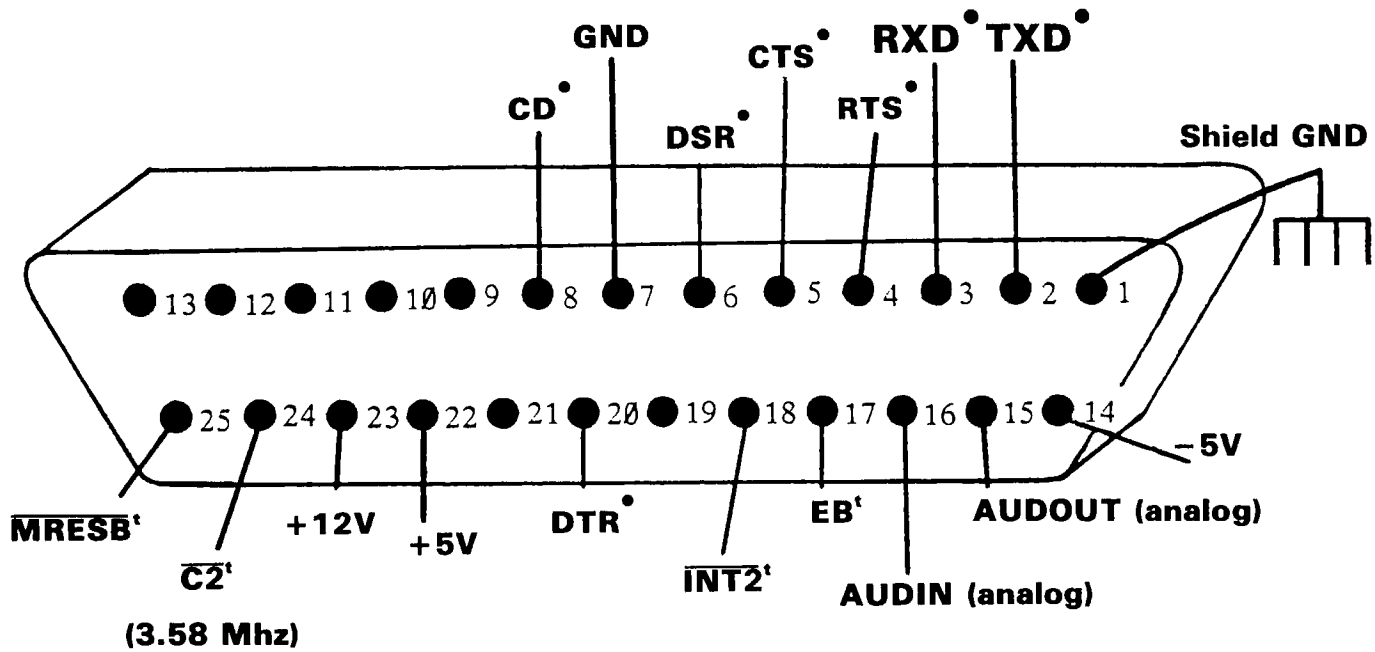

PIN	LINE	FUNCTION
1	GND	Frame Ground
2	TXD	Transmit Data
3	RXD	Receive Data
4	RTS	Request to Send
5	CTS	Clear to Send
6	DSR	Data Set Ready
7	GND	System Ground
8	CD	Carrier Detect
9-13	N/C	
14	-5V	-5 VDC Power
15	AUDOUT	Audio Out of Amiga
16	AUDIN	Audio Into Amiga
17	EB	Buffered Port Clock 716KHz
18	/INT2	Interrupt Line to Amiga
19	N/C	
20	DTR	Data Terminal Ready
21	N/C	
22	+5V	+5 VDC Power
23	+12V	+12 VDC Power
24	/C2	3.58MHz Clock
25	MRESB	Buffered System Reset

EXTERNAL DISK CONNECTOR

— J7 —

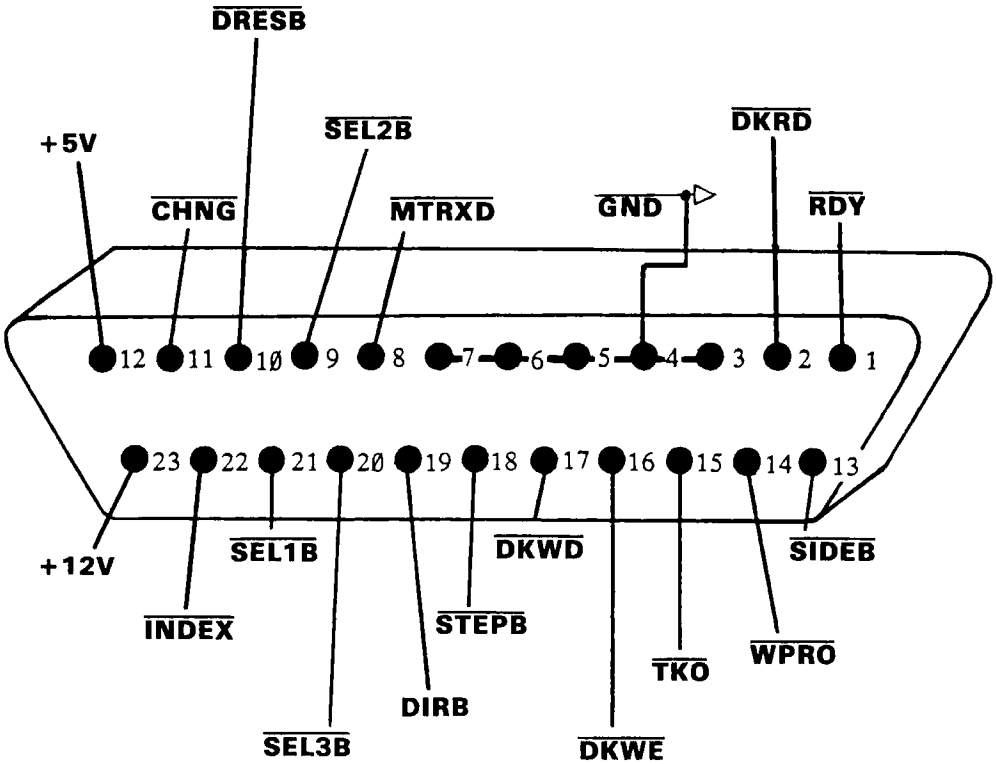

PIN	LINE	FUNCTION
1	/RDY	Disk Ready — Active Low
2	/DKRD	Disk Ready Data — Active Low
3-7	GND	Ground
8	/MTRXD	Disk Motor Control — Active Low
9	/SEL2B	Select Drive 2 — Active Low
10	/DRESB	Disk RESET — Active Low
11	/CHNG	Disk has been Removed from Drive — Latched Low
12	+5	5 VDC Supply
13	/SIDEB	Select Disk Side — 0 = Upper 1 = Lower
14	/WPRO	Disk is Write Protected — Active Low
15	/TKO	Drive Head Position over Track 0 — Active Low
16	/DKWE	Disk Write Enable — Active Low
17	/DKWD	Disk Write Data — Active Low
18	/STEPB	Step the Head — Pulse, First Low then High
19	DIRB	Select Head Direction — 0 = Inner 1 = Outer
20	/SEL3B	Select Drive 3 — Active Low
21	/SEL1B	Select Drive 1 — Active Low
22	/INDEX	Disk Index Pulse — Active Low
23	+12	12 VDC Supply

MOUSE/JOYSTICK/LIGHTPEN PORTS

— J11 and J12 —

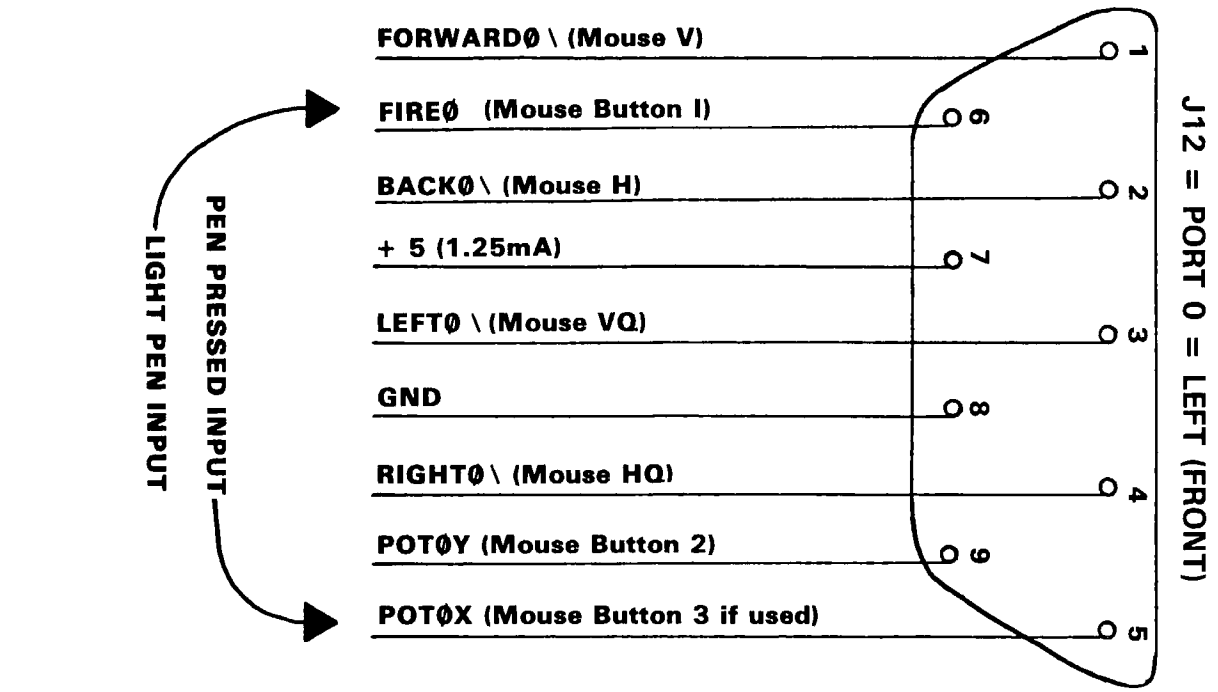

Port Ø is closer to Front

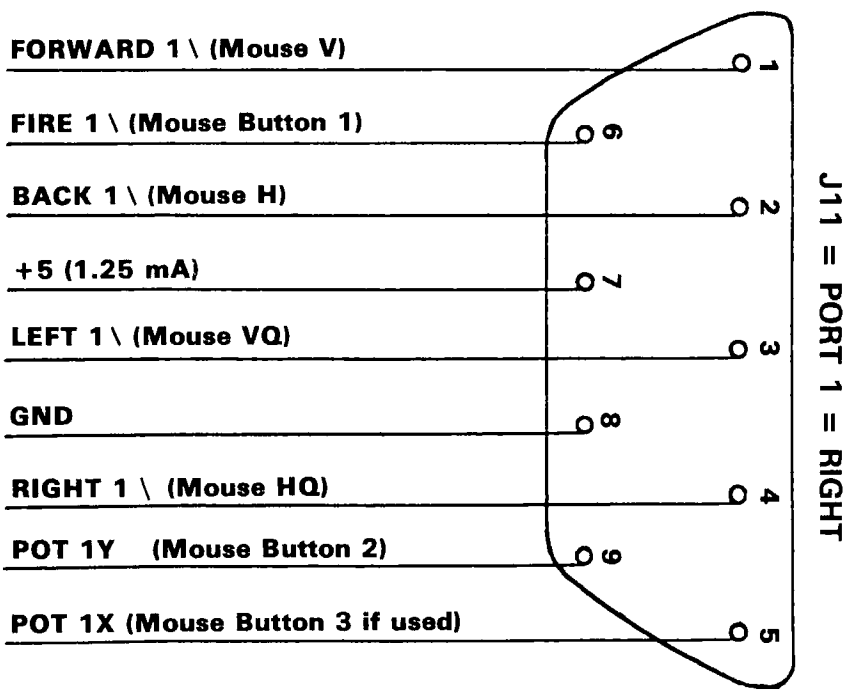

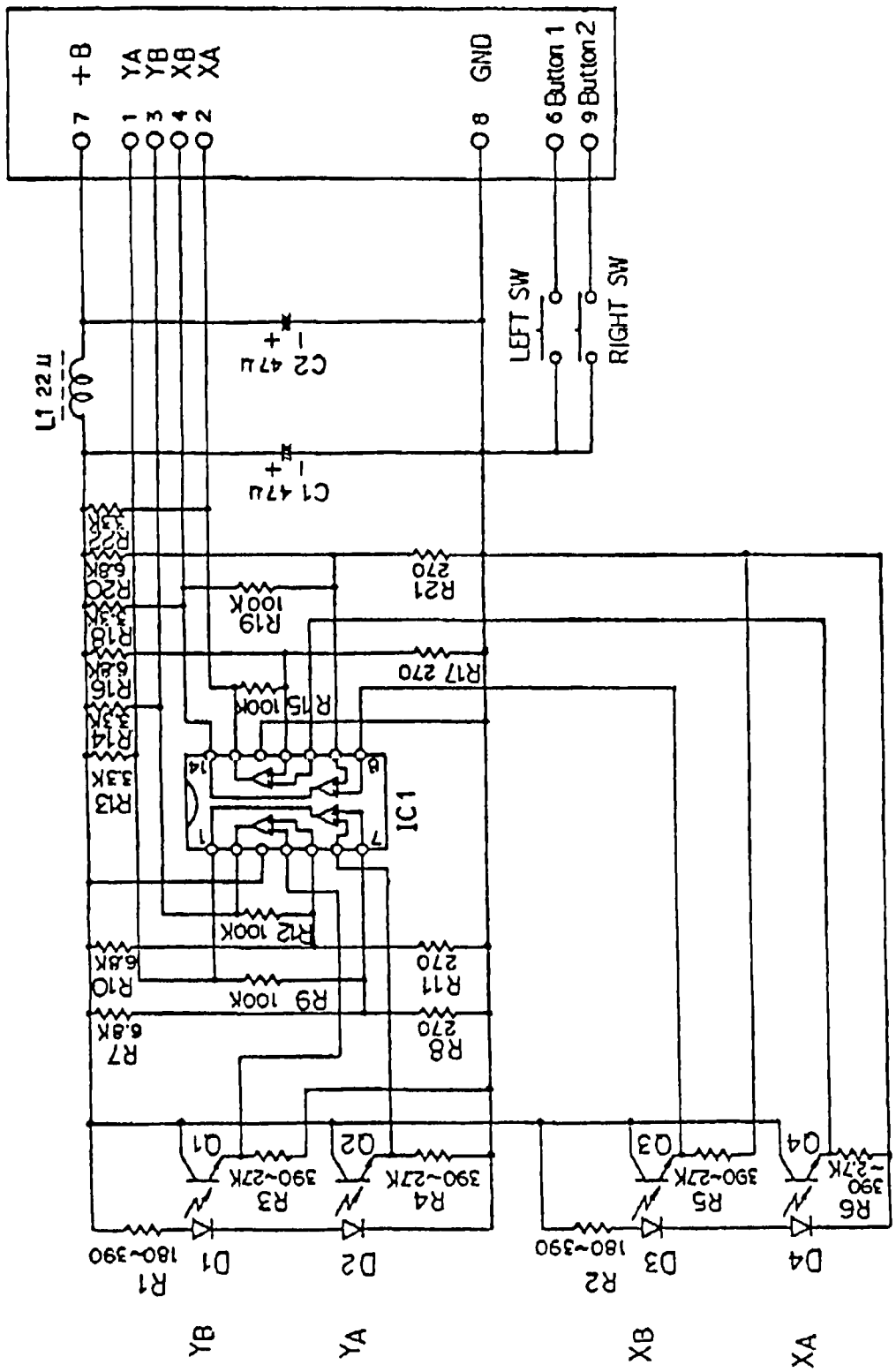

SCHEMATIC
AMIGA MOUSE ASSY #327124

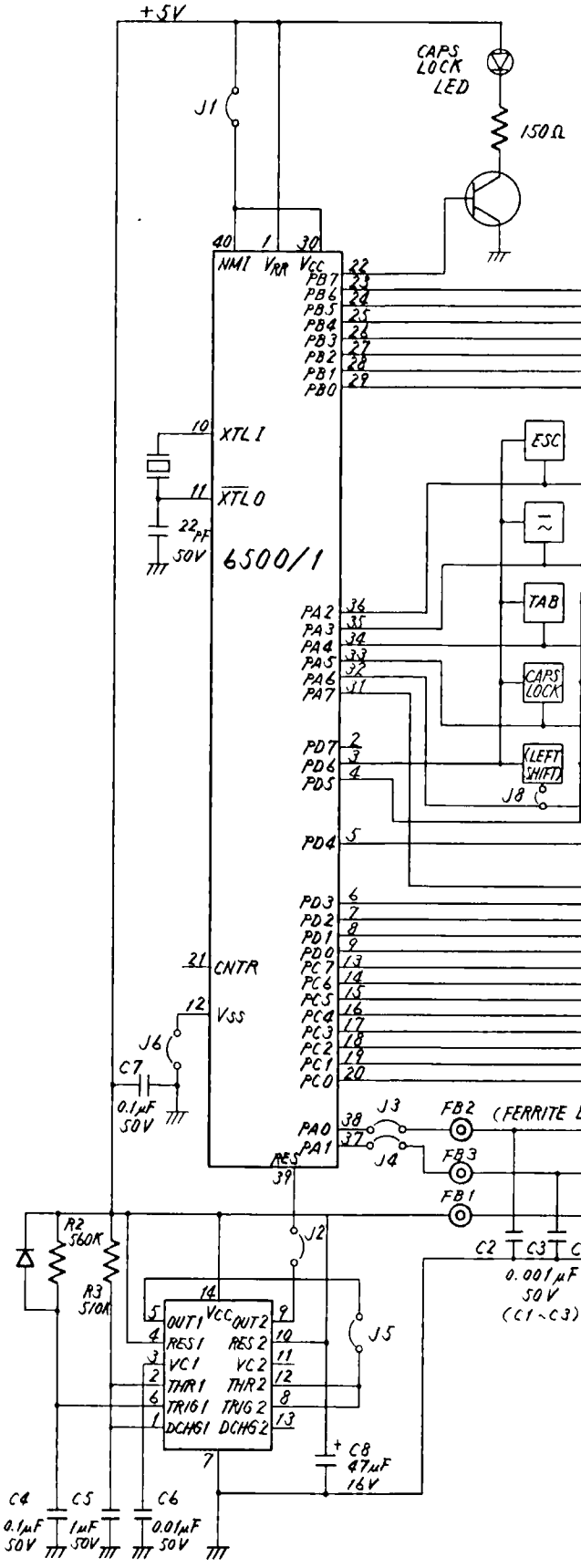
+5V
CAPS LOCK LED
150Ω
J1
NMI
VRR
VCC
PB7
PB6
PB5
PB4
PB3
PB2
PB1
PB0
XTL I
XTL O
22pF 50V
6500/1
ESC
TAB
CAPS LOCK
(LEFT SHIFT)
J8
PA2
PA3
PA4
PA5
PA6
PA7
PD7
PD6
PD5
PD4
PD3
PD2
PD1
PD0
PC7
PC6
PC5
PC4
PC3
PC2
PC1
PC0
CNTR
Vss
J6
C7
0.1μF 50V
J3
J4
PA0
PA1
RES
FB2
FB3
FB1
(FERRITE
R2 560K
R3 510K
J2
J5
OUT1
RES1
VC1
THR1
TRIG1
DCHG1
VCC
OUT2
RES2
VC2
THR2
TRIG2
DCHG2
C8 47μF 16V
C2
C3
0.001μF 50V
(C1~C3)
C4 0.1μF 50V
C5 1μF 50V
C6 0.01μF 50V

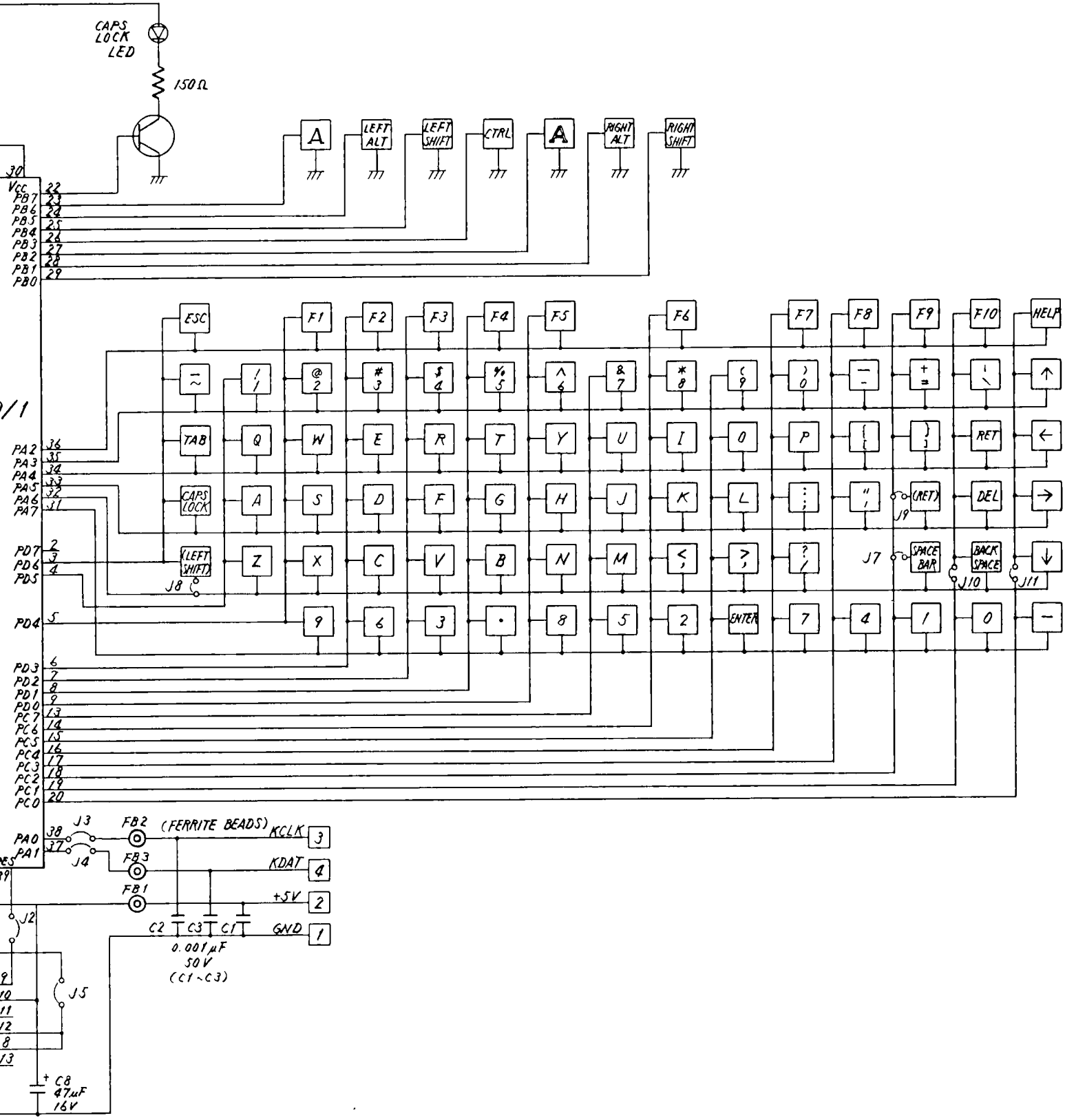

SCHEMATIC
AMIGA KEYBOARD ASSY #327063

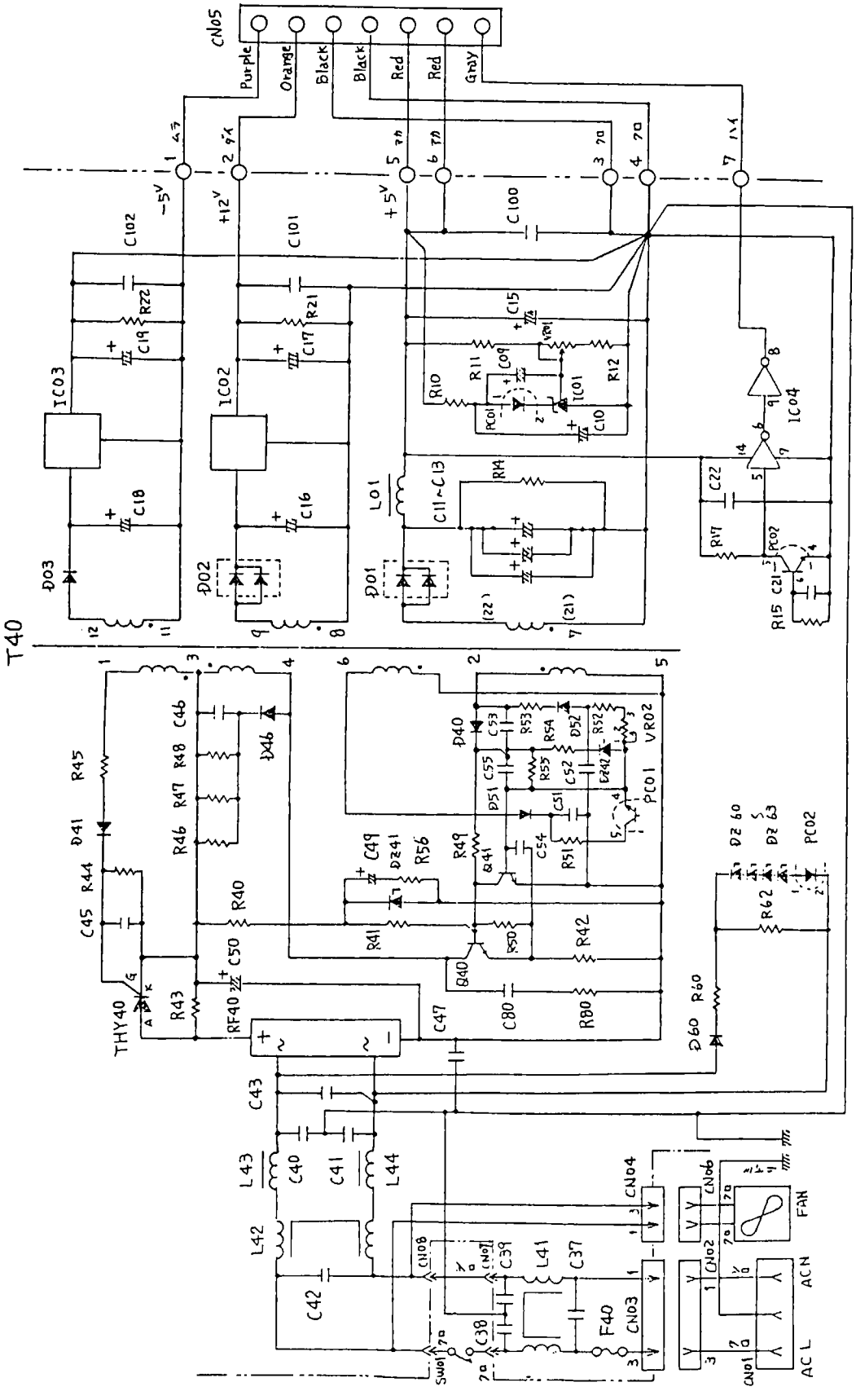

SCHEMATIC
AMIGA POWER SUPPLY ASSY #327173

This drawing is provided for reference ONLY. It does not imply the serviceability of the Amiga Power Supply. It is the policy of Commodore Business Machines to REPLACE a defective power supply due to the unique parts used by the OEM supplier of the unit. UL requirements specify that EXACT replacement parts must be used.

RAM EXPANSION CARTRIDGE

PCB ASSY #327186

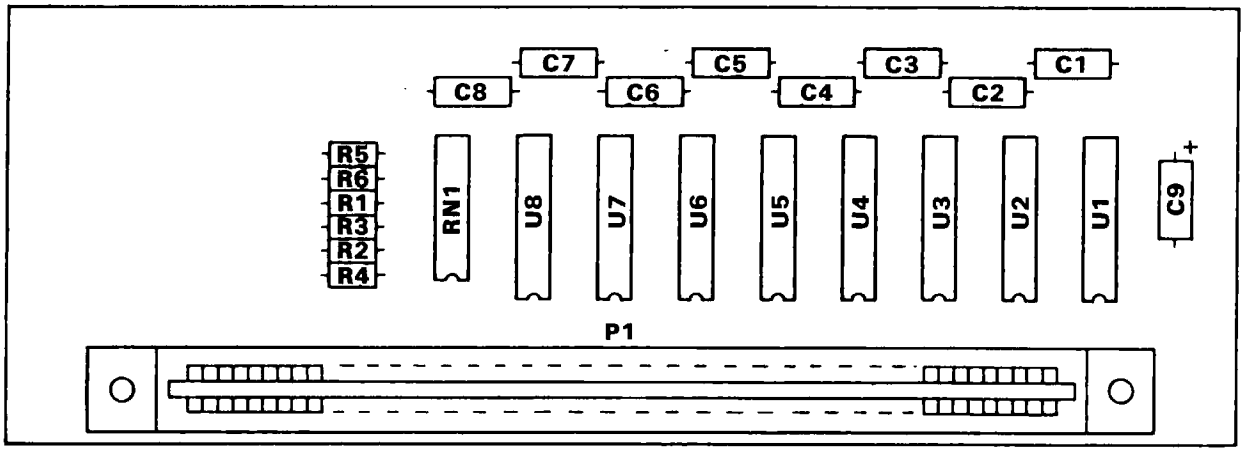

BOARD LAYOUT

PARTS LIST

U1-8	DRAM 64K x 4 120/150 nS
R1-6	CARBON RESISTOR 33Ω 1/4 W 5%
RN1	RESISTOR PACK DIP 8 pin 39Ω
C1-8 C9	CERAMIC CAPACITOR 0.22μF 50V TANTALUM CAPACITOR 10μF 10V
P1	CARD EDGE CNNCT 3.96 pitch 60 pin

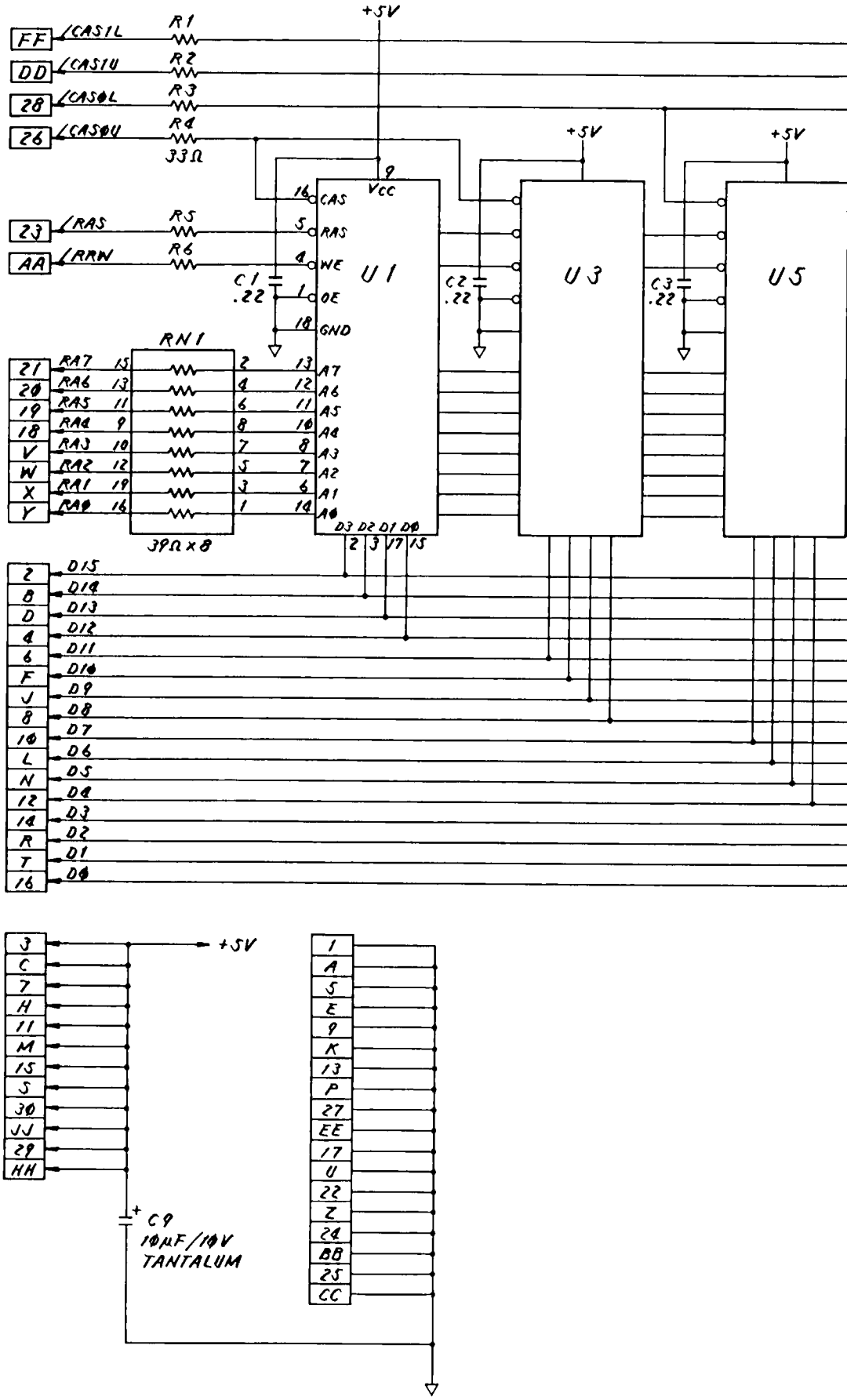
+5V
FF /CAS1L
DD /CAS1U
28 /CAS0L
26 /CAS0U
R1
R2
R3
R4
33Ω
23 /RAS
AA /RRN
R5
R6
C1
.22
U1
U3
U5
C2
.22
C3
.22
Vcc
CAS
RAS
WE
OE
GND
RN1
RA7 RA6 RA5 RA4 RA3 RA2 RA1 RA0
A7 A6 A5 A4 A3 A2 A1 A0
D3 D2 D1 D0
39Ω x 8
D15 D14 D13 D12 D11 D10 D9 D8 D7 D6 D5 D4 D3 D2 D1 D0
+5V
C9
10μF/10V
TANTALUM

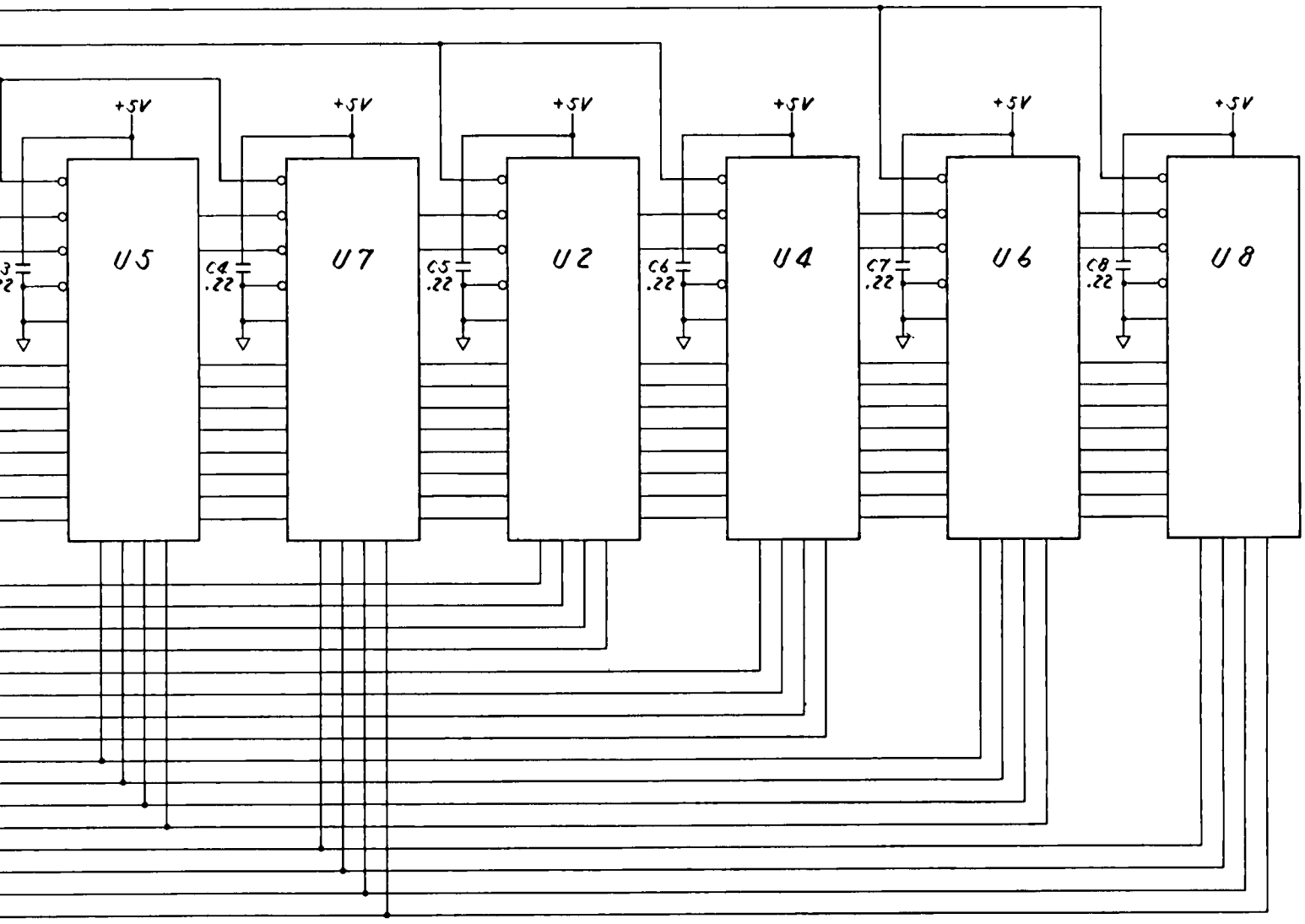

SCHEMATIC
RAM EXPANSION ASSY #252157

PIGGYBACK BOARD
PARTS LIST — PCB ASSEMBLY #327139
C — Indicates Commodore Stocked Part Number

INTEGRATED CIRCUITS

U1B-U1E	DRAM 256K 150nS	
U1H	74F139 Dual 1 of 4 Decoder	
U1K, U1L	74F257 Multiplexer	
U2B-U2E	DRAM 256K 150nS	
U2H, U2J	74F257 Multiplexer	
U2K,U2L	Refer to CONNECTORS	
U3J, U3L	74LS244 Octal Buffer	
U3K, U3H	Refer to CONNECTORS	
U4H	74LS373 Transparent Latch	
U4J	74LS244 Octal Buffer	
U4K	74LS373 Transparent Latch	
U4L, U5K	74LS244 Octal Buffer	
U5L	74LS393 Dual Module Cntr.	
U5M	74F02 Quad NOR	
U6J	PAL DAUG CAS	C252128-04
U6K	PAL CAS	C252128-02
U	PAL DAUG EN	C252128-03
U	PAL EN	C252128-01
U	Refer to CONNECTORS	

RESISTORS — All values are in ohms- 1/4 W with a 5% tolerance unless noted otherwise.

R1-6	39
R7-9	1K

RESISTOR PACKS

RN1	SIP, 470Ω, 1/8 W 9 pin
U2F	DIP, 39Ω

CAPACITORS

C1	Tantalum 10μF 10V 20%
C2-9	Monolithic 0.22μF 50V
C10-11	Electrolytic 100μF 16V 20%
C12-31	Monolithic 0.1μF 50V

CONNECTORS

J1	Gold Female Top Entry Type C	
J1	6 pin	Molex 4455CC6
J2	4 pin	Molex 4455CC4
J3	2 pin	Molex 4455CC2
U2K, U2L	8 pin	Molex 4455CC8
U3K, U3H, U6P, U6Q	10 pin	Molex 4455CC10

PIGGYBACK BOARD

PCB ASSY #327139

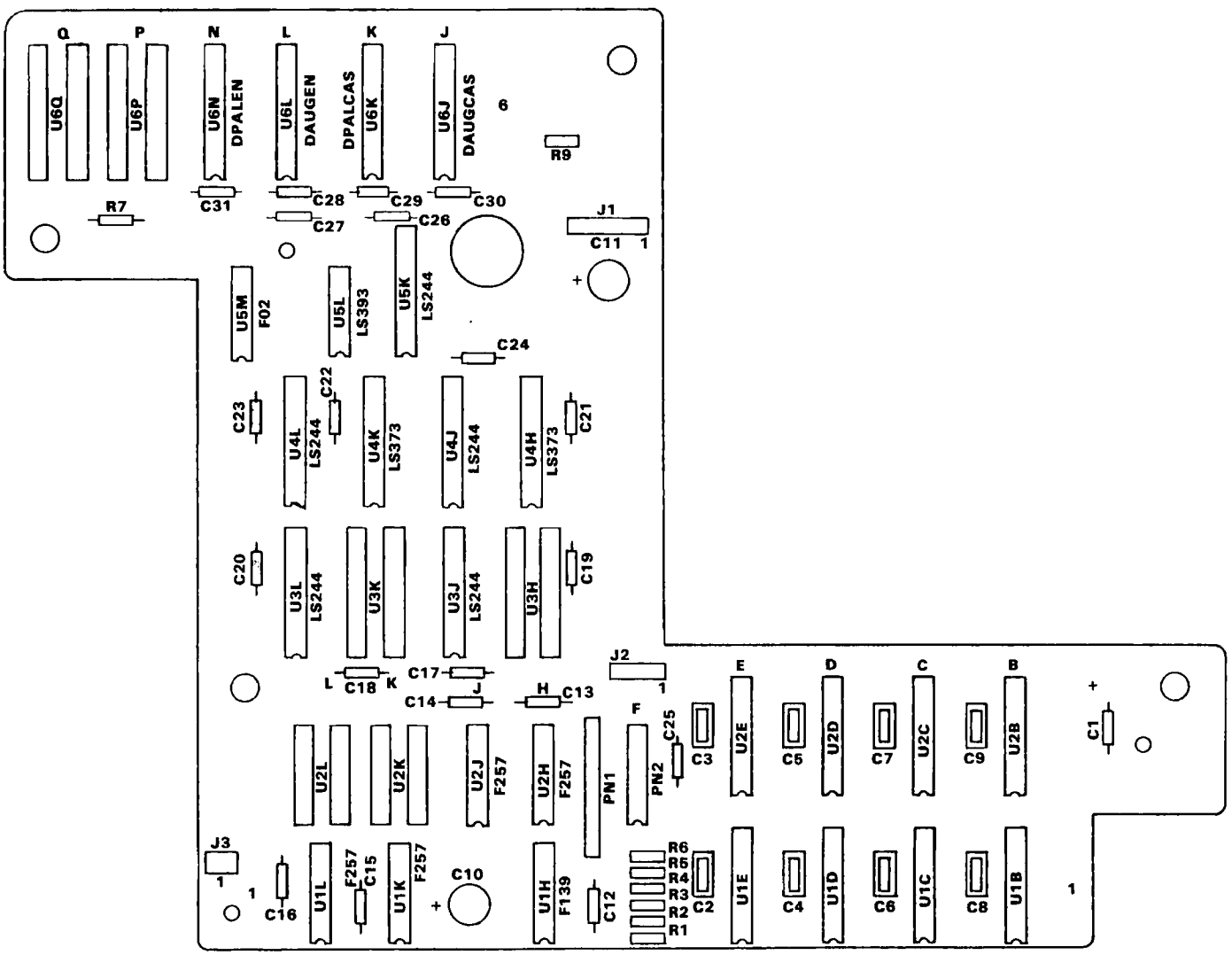

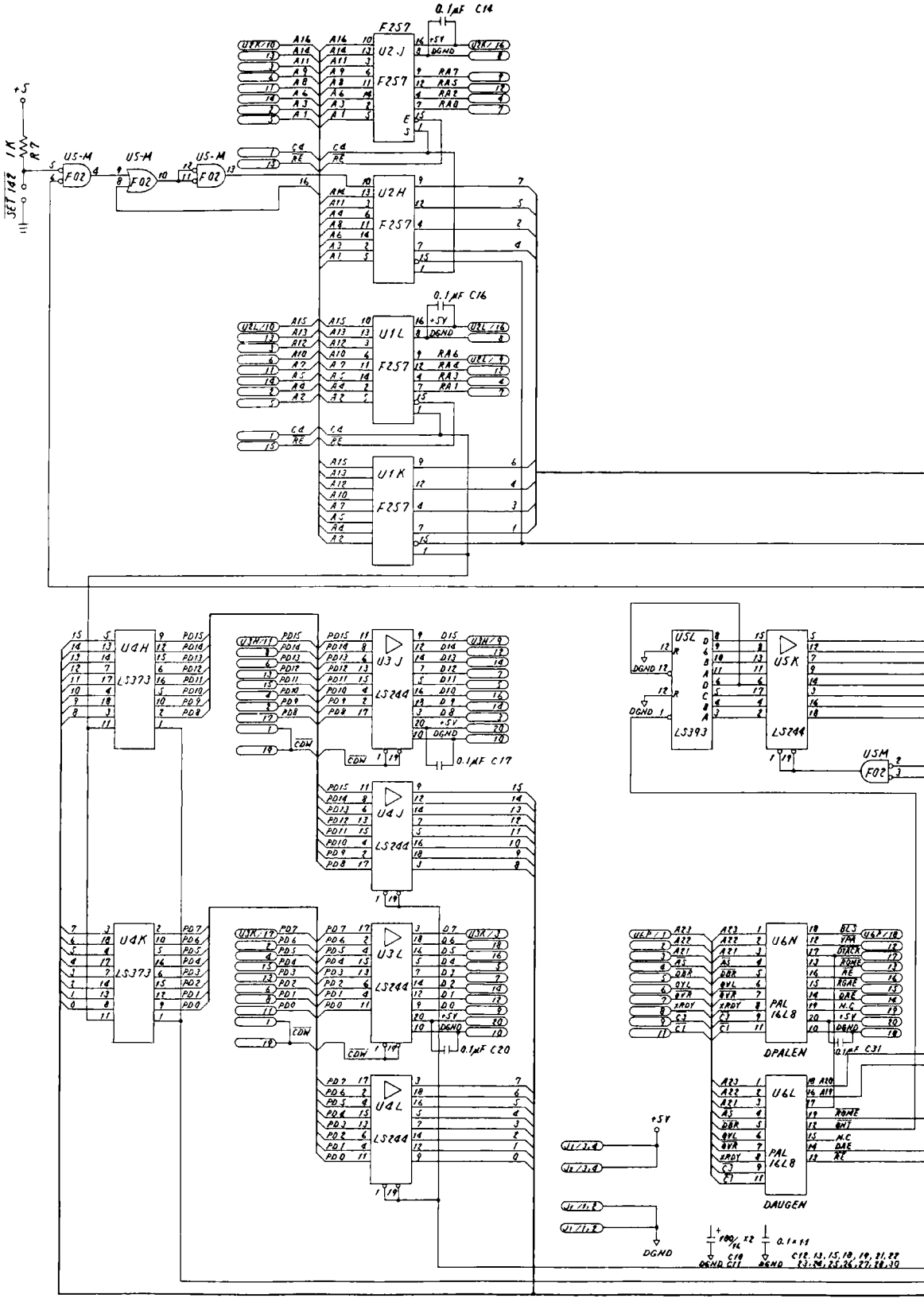

0.1µF C14
F257
U2J
U2H
U1L
U1K
0.1µF C16
U5-M
F02
SET 142
1K
R7
+5
U4H
LS373
U4K
LS373
U3J
LS244
U4J
LS244
U3L
LS244
U4L
LS244
0.1µF C17
0.1µF C20
U5L
LS393
U5K
LS244
U5M
F02
U6N
PAL 16L8
DPALEN
U6L
PAL 16L8
DAUGEN
0.1µF C31
+5V
DGND

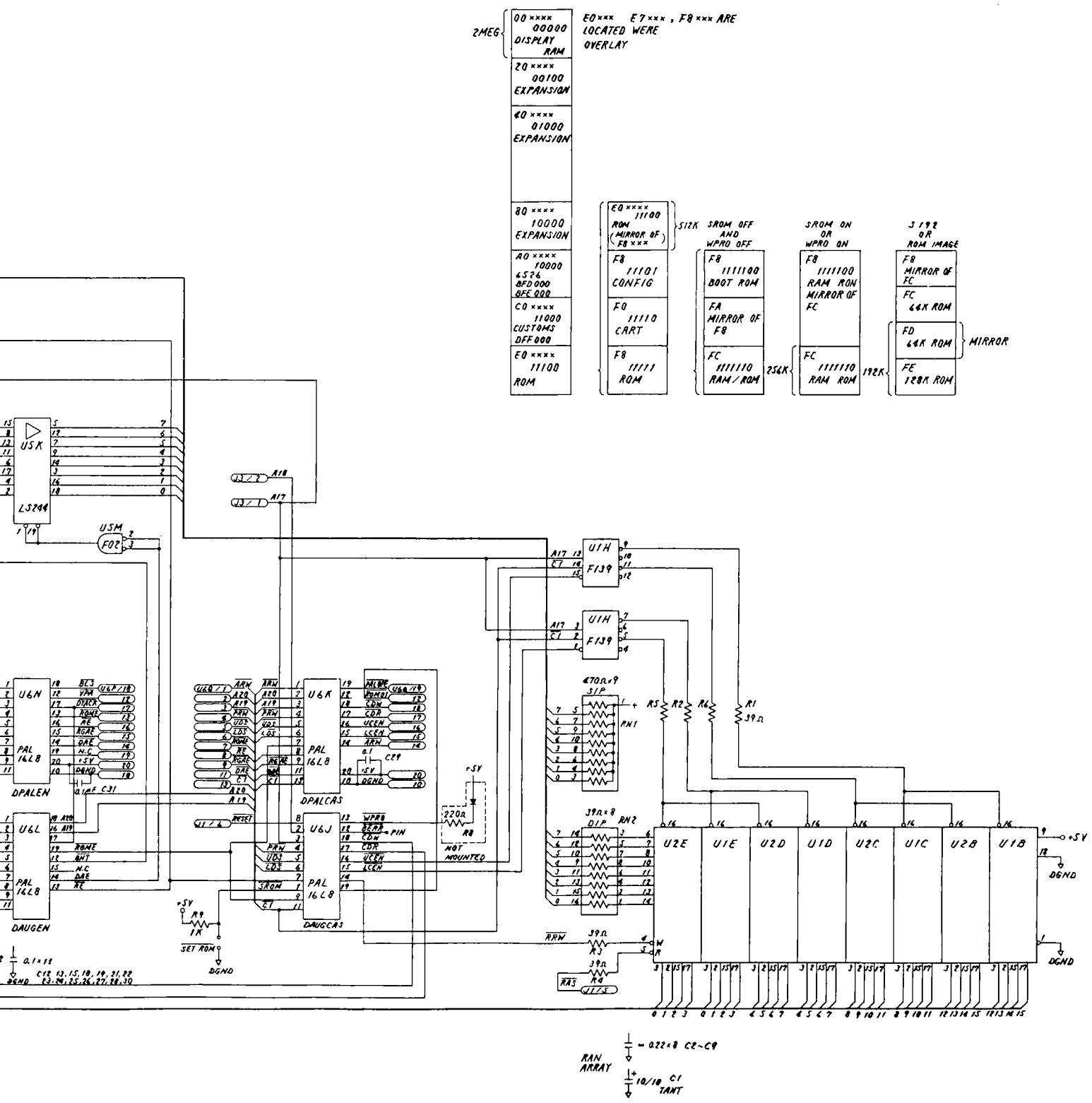

SCHEMATIC
AMIGA PIGGYBACK PCB ASSY #327139

PARTS LIST — PCB ASSEMBLY #327137

INTEGRATED CIRCUITS

U1B,C,D,E	64K x 4 DRAM 256K BIT 150NS
U1H,I	74F138 1 of 8 Decoder sub: 74S138 1 of 8 Decoder
U1J	74F399 MUX Latch
U1M	74LS157 Multiplexer
U2B,C,D,E	64K x 4 DRAM 256K BIT 150NS
U2H	74F374 Octal Latch sub: 74AS374 Octal Latch
U3H,J	74LS373 Transparent Latch
U4A	8362 DENISE C 252126-01
U4C	8361 AGNUS C 252125-01
U4E	8364 PAULA C 252127-01
U4H	74F74 D Flip-Flop sub: 74AS74 D Flip-Flop
U4J	74LS244 Octal Buffer
U4M	LM2901 Quad Comparator sub: TA75339 Quad Comparator
U5A	74HC244 CMOS Octal Buffer
U5G	LF347 Quad Op-Amp sub: μA4048 Quad Op-Amp
U5N	ROM Bootstrap EVEN C 252179-01
U5P	ROM Bootstrap ODD C 252180-01
U6A	74HC244 CMOS Octal Buffer
U6K	LM1488 RS-232 Driver
U6L	LM1489A RS-232 Receiver
U6M	74LS32 Quad OR Gate
U6N,P	8520 CIA C 318029-01
U6S	68000 CPU 8MHZ/10MHZ/12.5MHZ
U7A	MC1377 RGB to NTSC
U7M	74LS04 Hex Inverter
U7N	7407 Hex Buffer O.C.
U7P	7438 Quad NAND O.C.
U7R	7407 Hex Buffer O.C.
U8G,H,I	74F74 D Flip-Flop sub: 74AS74 D Flip-Flop
U9G,I	74S51 Dual A/O/I Gate

TRANSISTORS

Q1,2,3	NPN 2SC 3504 (Sanyo)
Q4,5	NPN 2SC 945A (NEC)
Q8	NPN 2SC 752G (Toshiba)
Q9	PNP 2SB 825 (Sanyo)
Q10	NPN 2SC 945A (NEC)
Q18	PNP 2SA 733 (NEC) sub: PNP 2SA 564 (Matsushita) sub: PNP 2SA 608 (Sanyo)

DIODES

CR2	IN4148 sub: 1S1588

RESISTORS — All values are in ohms- 1/4 W with a 5% tolerance unless noted otherwise.

R1	360	R71	8060 1%
R2	1K	R72	287 1%
R3	360	R73	1150 1%
R4,5	1K	R74	100 1%
R6	47	R75	49.9 1%
R7,8	100	R76	287 1%
R9	75	R77	1150 1%
R10	220	R78	100 1%
R11	75	R79	49.9 1%
R12	220	R80	47
R13,14	1K	R81,82	10K
R15	470	R83,84	360
R16	75	R85	1100 1%
R17-22	47	R86	1150 1%
R23-25	75 1%	R87	750
R26		R88,89	36K
R27	10K	R90	750
R28,29	33	R91,92	3.3K
R30,31	47	R93	36K
R32,33	3.3K	R94,95	100
R34-36	33	R96	36K
R37	910	R97,98	3.3K
R38-42	47	R99	0.47 sub: 0.5
R43	1K		
R44	220	R100	1K
R45	1K	R101	1M
R46	3.3K	R102	10K
R47	1K	R103,104	1K
R48	3.3K	R105	100K
R49	1K	R106	22K
R50,51	3.3K	R107	33
R52	1690 1%	R108	200
R53	1000 1%	R109	470
R54	2000 1%	R110	1.5 1/2W 5%
R55	4020 1%		
R56	8060 1%	R111,112	1K
R57	287 1%	R113	39
R58	1150 1%	R114,115	1
R59	100 1%	R116-119	220
R60	49.9 1%	R120	150
R61	560	R121,122	1
R62	1.2K	R123-126	220
R63	3920 1%	R127	150
R64	1000 1%	R128-133	39
R65	2000 1%	R134	47
R66	4020 1%	R135	3920 1%
R67	8060 1%	R136-139	470
R68	1000 1%	R140	220K
R69	2000 1%	R141	10
R70	4020 1%	R142	10K

PARTS LIST — PCB ASSEMBLY #327137 (Continued)

RESISTOR PACKS

RN1	1K	1/10w	SIP	10 pin	pin 1 common
RN2	1K		SIP	6 pin	pin 1 common
RN3	39		DIP	16 pin	isolated
RN4	470	1/8w	SIP	10 pin	pin 1 common
RN5	1K	1/10w	SIP	10 pin	pin 1 common
RN6	10K	1/8w	SIP	10 pin	pin 1 common
RN8	2.7K	1/8w	SIP	10 pin	pin 1 common
RN9	100K	1/10w	SIP	10 pin	pin 1 common

CAPACITORS

C1	MONO	0.1μF	50V	
C2-4	MONO	0.01μF	50V	
C5,6	MONO	0.1μF	50V	
C7-15	MONO	1000pF	50V	
C16	MONO	0.01μF	50V	
C17-19	MONO	1000pF	50V	
C20,21	MONO	0.01μF	50V	
C22	MONO	1000pF	50V	
C23-35	MONO	470pF	50V	
C36	MONO	0.01μF	50V	
C37-40	MONO	0.1μF	50V	
C41,42	MONO	0.01μF	50V	
C43,44	MONO	1000pF	50V	
C45	MONO	47pF	50V	
C46	MONO	0.1μF	50V	
C47	MONO	1000pF	50V	
C48-50	ELECT	22μF	25V	
C51	MONO	0.01μF	50V	
C52,53	MONO	0.1μF	50V	
C54	MONO	100pF	50V	
C55-57	MONO	0.01μF	50V	
C58	MONO	47pF	50V	
C59-61	MONO	0.1μF	50V	
C62	TANT	10μF	10V	20%
C63-66	ELECT	22μF	25V	
C67	MONO	0.1μF	50V	
C68	MONO	1000pF	50V	
C69	MONO	0.1μF	50V	
C70	MONO	1000pF	50V	
C71	MONO	0.1μF	50V	
C72	MONO	1000pF	50V	
C73	MONO	0.1μF	50V	

CAPACITORS (Continued)

C74	MONO	1000pF	50V	
C75-77	MONO	0.1μF	50V	
C78-80	ELECT	100μF	16V	
C81-86	MONO	0.1μF	50V	
C87	TANT	10μF	10V	20%
C88	MONO	0.01μF	50V	
C89	MONO	0.1μF	50V	
C90,91	MONO	0.01μF	50V	
C92	ELECT	47μF	16V	(REV.A)
	ELECT	100μF	16V	(REV.6)
C93	ELECT	220μF	16V	(REV.A)
	ELECT	100μF	16V	(REV.6)
C94	OMITTED			(REV.A)
	ELECT	100μF	16V	(REV.6)
C95	ELECT	470μF	16V	
C96-100	MONO	0.1μF	50V	
C101	MONO	0.01μF	50V	
C102	MONO	0.0047μF	50V	
C103,104	MONO	220pF	50V	
C105	MONO	0.0047μF	50V	
C106	MONO	0.01μF	50V	
C107	MONO	0.047μF	50V	
C108,109	MONO	0.01μF	50V	
C110	MONO	0.047μF	50V	
C111-113	MONO	0.1μF	50V	
C114	TANT	10μF	10V	20%
C115-117	MONO	0.1μF	50V	
C118	TANT	10μF	10V	20%
C119-122	MONO	0.047μF	50V	
C123	MONO	0.1μF	50V	
C124	TANT	10μF	10V	20%
C125	MONO	0.1μF	50V	
C126	TANT	10μF	10V	20%
C127-133	MONO	0.1μF	50V	
C134,135	TANT	10μF	10V	10%
C136-138	MONO	0.1μF	50V	
C139,140	MONO	0.01μF	50V	
C141	MONO	1000pF	50V	
C142	TANT	10μF	10V	20%
C143-150	MONO	0.22μF	50V	
C151-159	MONO	0.1μF	50V	
C162-166	MONO	1000pF	50V	
C169-173	MONO	1000pF	50V	
C174	MONO	0.01μF	50V	
C175	ELECT	100μF	16V	
C176,177	MONO	470pF	50V	
C178	MONO	0.1μF	50V	

PARTS LIST — PCB ASSEMBLY #327137 (Continued)

CONNECTORS	
J1	RCA Jack, Yellow
J2	8 Pin Din C 325573-01
J3 M59-23-20-738P-3	D-Sub, 23 Pin Male, Rt Angle TRW
J4	RCA Jack, Red
J5	RCA Jack, White
J6 M59-25-30-435S-4	D-Sub, 25 Pin Female, Rt Angle TRW
J7 M59-23-30-435S-4	D-Sub, 23 Pin Female, Rt Angle TRW
J8 M59-25-30-738P-3	D-Sub, 25 Pin Male, Rt Angle TRW
J9	RJ11 PCB Mtg Cnnct Rt Angle Gold Plt Molex 90077-1040
J10	Header Assy 2.54 pitch, 34 pin
J11,12	D-Sub, 9 Pin Male, Rt Angle TRW M59-09-30-837P
J13	Header Assy 2.54 pitch, 4 pin
J14	Header Assy 3.96 pitch, 7 pin
J15	Header Assy 2.54 pitch, 2 pin

CONNECTORS (Continued)	
U2I,J	Header Assy 2.54 pitch, 8 pin
U3G,I	Header Assy 2.54 pitch, 10 pin
U5L,M	Header Assy 2.54 pitch, 10 pin

MISCELLANEOUS	
DL1	Delay Line 400 nS TDK DL122401D-1533 sub: Toko H321LNP-1436PBAB
FB1-4	Power Ferrites
FB5-43	Ferrite Beads
L1	Coil Inductor 39μH 10%
OSC1	Crystal Module 28.63636 MHZ 25ppm C 325566-12 sub: 28.63636 MHZ 15ppm C 325566-14
T1	Chroma Bandpass Transformer Toko 166NNF-10264AG
	RF Shield Box C 327044-01
	RF Shield Top C 327045-01

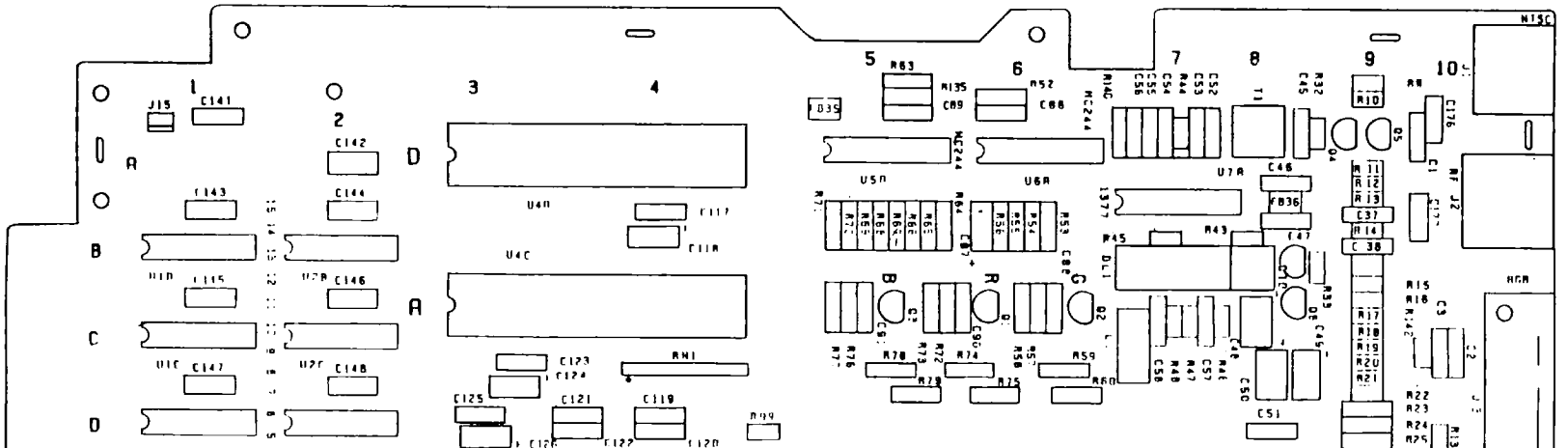

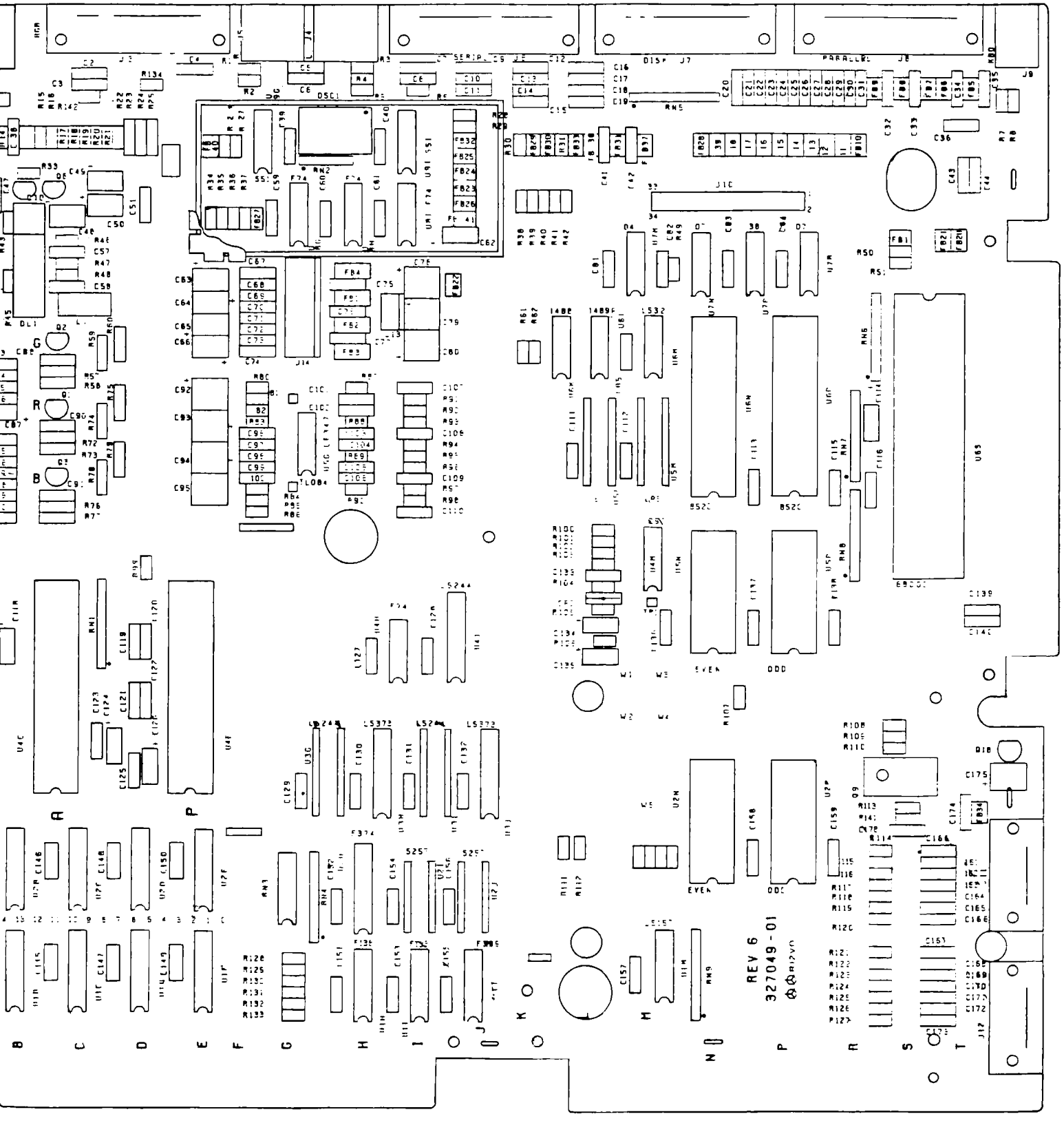

BOARD LAYOUT
AMIGA MAIN LOGIC PCB ASSY #327137

J9 KBD

P2

MALE PARALLEL J8

DISK 0 J10

DISK 0 J13 POWER

FEMALE DISK 1 J7

SERIAL FEMALE J6

LEFT (0) MALE J12

RIGHT (1) MALE J11

RF MOD J2

COMP J1

RGB MALE J3

J14 DC POWER

POWER FERRITES (4)

68000 U6S

8520 U6P

8520 U6N

8364 PAULA U4E

8362 DENISE U4A

8361 AGNUS U4C

MC1377 U7A

23256 EVEN U5N U2N

23256 ODD U5P U2P

PALEN U5L

PALCAS U5M

OSC1 28.63636 MHZ

LF347 U5G

LM2901 U6M

LS244 U4J

LS373 U3H U3J

LS244 U3G U3L

F257 U2L U2J

RAM BYPASS CAPS : 0.22µF : C143 ~ C150

10µF TANTALUM : C142

RAM EXPANSION P1

SGND	SHIELD
DGND	DIGITAL
VGND	VIDEO
AGND	AUDIO

① = THIS IC MOVED UP TO RAM ROM BOARD.

SCHEMATIC
AMIGA MAIN LOGIC PCB ASSY #327137

CBM APPROVED VENDORS FOR GENERIC PARTS

Component parts are stocked by Commodore if they are custom, proprietary or difficult to obtain in the field. Those common components that are available from many sources are considered GENERIC and are best obtained from your local parts distributor. Often critical parameters may vary between manufacturers and will affect the performance of a product. It is strongly RECOMMENDED that you use only parts from vendors that have been qualified and APPROVED by Commodore for use in our products. If you have a board with ORIGINAL parts and the vendor is not listed as approved, you may assume that the vendor was approved after this printing and also may be used as a replacement part.

RAM **64K X 4 BIT DYNAMIC RAM**

ACCESS TIME	HITACHI	FUJITSU	NEC
150 nS	HM50464P-15	MB81464-15	D41464C-15

CPU **68000 MICROPROCESSOR**

	HITACHI	MOTOROLA	ROCKWELL	SIGNETICS
8 MHZ	68000L8	68000L8	R68000P8	SCN68000C8N64
10 MHZ	68000L10	68000L10	X	X
12.5 MHZ	68000L12	68000L12	X	X

TTL DEVICES

7407	T.I., NATIONAL, SIGNETICS, MOTOROLA
7438	T.I., NATIONAL, SIGNETICS, MOTOROLA
74AS74	T.I.
74AS374	T.I.
74F02	FAIRCHILD
74F74	FAIRCHILD
74F138	FAIRCHILD
74F139	FAIRCHILD
74F257	FAIRCHILD
74F374	FAIRCHILD
74F399	FAIRCHILD
74HC244	T.I., NATIONAL, TOSHIBA
74LS04	T.I., NATIONAL, SIGNETICS, MOTOROLA
74LS32	T.I., NATIONAL, SIGNETICS, MOTOROLA
74LS157	T.I., NATIONAL, SIGNETICS, MOTOROLA
74LS244	T.I., NATIONAL, SIGNETICS, MOTOROLA
74LS373	T.I., NATIONAL, SIGNETICS, MOTOROLA
74LS393	T.I., NATIONAL, SIGNETICS, MOTOROLA
74S51	T.I., NATIONAL, SIGNETICS
74S138	T.I., NATIONAL, SIGNETICS, MOTOROLA

LINEAR AND MISCELLANEOUS CHIPS

	T.I.	NATIONAL	MOTOROLA	TOSHIBA
1377	X	X	MC1377	X
1488	SN75188	LM1488	MC1488	X
1489A	SN75189	LM1489A	MC1489	X
2901	X	LM2901	X	X
347	X	LF347N	LF347N	X
75339	X	X	X	TA75339

Commodore Business Machines, Inc.
1200 Wilson Drive • West Chester, PA 19380

Commodore Business Machines, Ltd.
3470 Pharmacy Avenue • Agincourt, Ontario M1W 3G3